LED Essence Tube
RL-T8 36 865/G13 EM

Radium

Product Datasheet Date: 24.09.2026



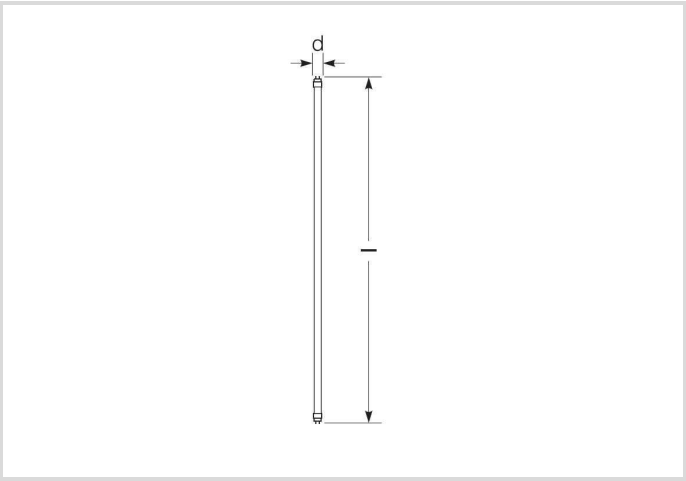

E | 6500K | 50 000h | 3 YEARS GUARANTEE

General Data

Article No.	44119878
Code	RL-T8 36 865/G13 EM
Product EAN	4008597198786
Box quantitiy (pcs.)	25
EAN Box	4008597498787
Gross weight of box in kg	7.15
Length of box in m	1.305
Width of box in m	0.175
Height of box in m	0.18
Product weight	198 g
Product status	Active

Electric Parameters

Wattage	15.0 W
Weighted energy consumption in 1000 hours	15 kWh
Lamp power	15.0 W
Power factor	> 0.9
Power factor	0,9

LED Essence Tube
RL-T8 36 865/G13 EM

Radium

Electric Parameters

Nominal voltage	220-240 V
Voltage type	AC
Nominal current	75 mA
Nominal current (mA)	75 mA
dimmable	No

Light Application Parameters

Luminous flux	1900 lm
Rated luminous flux according to IEC 62612	1900 lm
Luminous flux	1900 lm
Beam angle	200 °
Efficacy / Luminous efficiency	127 lm/W
Total mains efficacy	127 lm/W
Color temperature	6500 K
Color coordinate X	0.313
Color coordinate Y	0.337
Color rendering index	≥ 80
Color rendering index nominal	80
Color Stability	≤ 5 sdcm

Service Life

Average life	50000 h
Mean service life	50000 h
Min. number of switching cycles	200000
Lamp survival factor at 6000h	≥ 0.90
Early failure rate at 1000h	≤ 5.0 %
Guarantee	3 years

Specification

Energylabel (G -> A)	E
Diameter	26,7 mm
Tube diameter	26 mm
Length	1212 mm
Length	1200 mm
Burning position	any
Mercury content	0.0 mg

LED Essence Tube
RL-T8 36 865/G13 EM

Radium

Specification

Shatterproof	No
Photobiological safety according to EN 62471	RG0
Lamp shape	Tube, double-ended
Base	G13
Material	Glass
Colour	White

Notes on Operation

IP Class (Room/Ceiling)	IP 20
Burning position	any
Mode of operation	CCG, 230V
Range of storage temperature	-20…+80 °C
Ambient temperatures	-20 … +45 °C
With movement sensor	No

Information especially for EPREL

Lighting technology	LED
Mains/Non mains connectable	MLS
Directional or non-directional light	NDLS
Color tunable light source	No
Type of color temperature	SINGLE_VALUE
Color stability MacAdams EPREL	5
Displacement factor EPREL	0.90
Life factor EPREL	0.90
Lumen maintenance EPREL	0.70
Flicker	1.0
Stroboscopic effect	0.4
EPREL ID number	1654348

Miscellaneous

Similar products	44119877, 44020229, 43719851, 43920129, 44119883

Notes

T8 tubular LED lamp for exchange with fluorescent lamps, daylight, glass bulb, non-dim, base G13. Please, note installation instructions!

Please, refer to www.radium.de/recycling for notes on disposal of burned-out lamps as well as lamp breakage.
The "lifespan L70" described for LED lamps indicates the number of hours when the luminous flux has decreased to 70% of its initial value.
The optinal field 'info about service life' contains the frame conditions according to standards based on which the specific service life has been determined. So, for example, "12B50, 50Hz" means that the mean service life (B50) has been determined with a 12h switching cycle at mains (frequency 50Hz), "3B50, HF" is based on a 3h switching cycle at electronic control gear (high frequency).

LED Essence Tube
RL-T8 36 865/G13 EM

Radium

Base

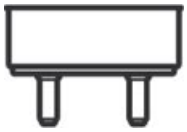

G13
IEC/EN 60061-1
sheet 7004-51-8

Spectrum

As daylight is a mixture of direct sunlight and light from the sky, the spectral distribution changes all the time due to the time of the day and the weather. The standard illuminant D65 corresponds to daylight with colour temperature of about 6500K.
The colour of coloured LEDs depends on the chemical elements within the light generating chip. The coloured light is generated directly and does not need filtering.
White LEDs are either RGB (red + green + blue chip in one LED = light colour white) or blue LED-chips with yellow/orange phosphor in the resin.
Visible region from 380 to 780 nm; height of graph corresponding with relative spectral emission (400mW/klm)per 10nm.

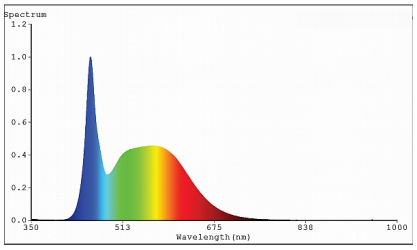

LED retrofit tube lamps for fluorescent lamps 6500K

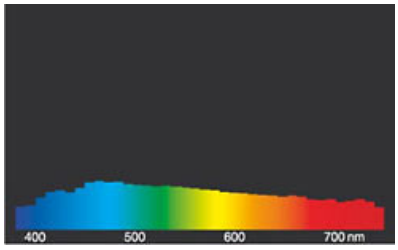

daylight(D 65)

Special features



General notes

Please note the installation instructions when replacing fluorescent lamps with LED tubes. Some LED lamp types are only suitable for 1: 1 replacement at the reespective burning position: with CCG by using the enclosed starter, with ECG with compatible control gear. Others can be operated directly on 230V (conversion of the luminaire), others again can 'do' CCG as well as 230V or all 3 variations. Neo tubes need an external LED driver (replacement of the control gear). LED Neo tubes are dimmable, all other LED tubes are not dimmable.

The technical design data in accordance with DIN and IEC. The producer does not take any responsibility for damage to persons or property in case of unsuitable operation or handling of the product. Operating data and dimensions are valid within the usual tolerances. Related lamp types (different bases, mains voltages) may be available on request. Sale and delivery are effected in accordance with the Radium Terms of Delivery and Payment valid on the day of conclusion of contract. Packing units offer economical advantages to the purchase and logistic department. Please match your quantity volume accordingly. For orders of a minimum quantity (clefts) with a lamp model the amount lower than the volume of each packaging unit, we will invoice 10 % additional charge per lamp type. Technical changes and terms of delivery are reserved. Manipulation of any kind to packaging or product is not permissible as this will violate Radium brand rights. Furthermore, technical properties of the product can change to its disadvantage or even destruction. Therefore, Radium cannot be responsible for consequential damages.
® = Registered trademark
Subject to change without notice. Errors and omissions excepted.

Safety instructions

To ensure full light efficiency and product life, the permissible temperature ranges must be observed and dry environment ensured. When operated with existing control gear, their compatibility with the lamp must be checked.

All technical data without guarantee.