LTPT Series

LED Tube Tri-Proof Light 20Watt 3.000Lumens

LED Tube Tri-Proof Light fixtures for exterior applications such as decks and deck rails. Due the water tightness the LTPT series can be installed on the roughest areas on deck. Standard supplied with 2 x M25 fast connecting glands on both ends for connection in series. Available with 5Watt 20-30Vdc emergency circuit.



Dimensions

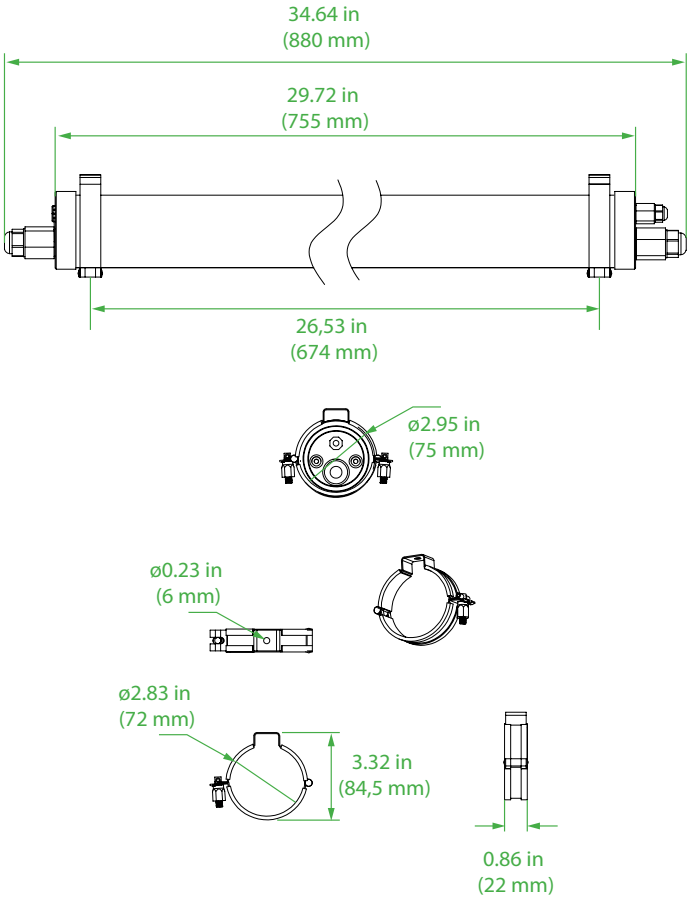

Installation brackets can
be installed on side caps-
or on the polycarbonate cover

Technical Information

Material:	A4 316 stainless steel end caps and polycarbonate cover
Hardware:	Marine grade A4 316 stainless steel
Lens:	180°
IP Rating:	IP69K
Light Source:	20Watt
	150Lumens per Watt
	Natural White 3900K
	CRI > 85
Power Source:	100-277Vac 50~60Hz (20-30Vdc emergency circuit available)
	Boke BK-BHL042-1100AM
	Overload, over-voltage, over-temperature and short circuit protection.
	Potted driver
Ambient Temperature:	Operating temperature -40°C ~+55°
Cable Entry:	2 x M25 fast connecting glands with internal 5-pole terminal block - *1
Mounting:	Movable A4 316 Stainless Steel brackets
Fixture weight:	3.74 lbs (1,7 kg)

Compliances

In compliance with rules of maritime classification societies,
additional VDE and IEC 60092-306.
(Equipment luminaires and lighting accessories for use on vessels)

E-LED Lighting BV & Inc.
European Office: Tel: +31 (0)346 28 62 62, E-mail Info@E-LEDLighting.com
United States Office: Tel: +1 (561) 776-1702, E-mail Info@E-LEDLighting.com