LumiO lamp with detachable cable

For easier installation and maintenance, the LumiO lamp can be supplied with a detachable cable connection. This allows the cable and lamp to be installed separately. The cable is easily replaced in the event of damage. If the cable sustains sheath damage underwater, the detachable connection will prevent water from entering the lamp housing, thus avoiding short circuits. This feature enhances the product's robustness. The connection utilizes the well-known and reliable SubConn, which does not adversely affect water ingress protection.

Additionally, the connection is wet-mateable, allowing for underwater replacement by divers.

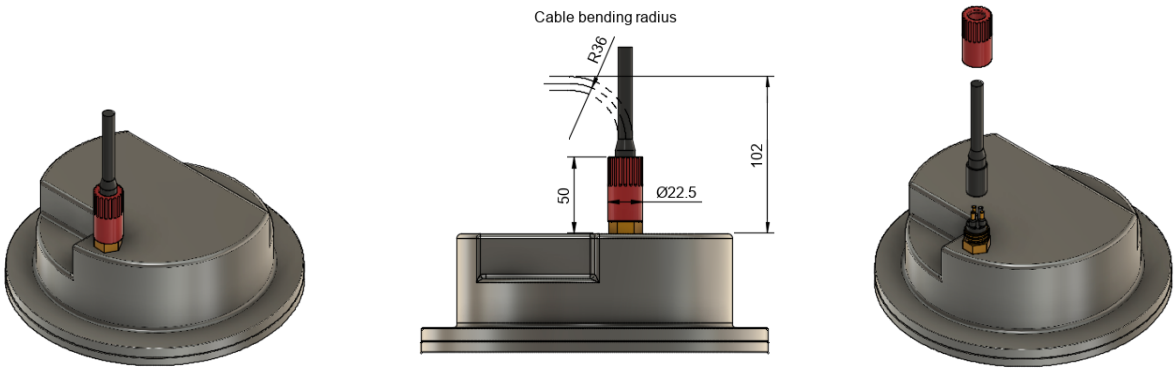

The cable will be supplied with a molded female connection. Standard cable lengths are 20m, 30m, 50m, and 80m, with other lengths available upon request.

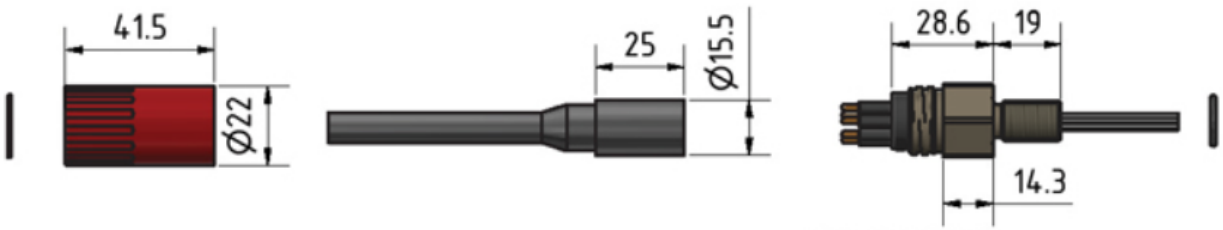

Locking Sleeve | Cable with moulded female inline plug | Male bulkhead plug

The SubConn connection is an option for all Seaoptic lamps upon request. Standard lamps come with a permanently attached cable and cable gland.