COMBI MAR 304 SWITCH RS/1-2 BK

Rotary switch surface mounting, Off-switch 2-pole, plastic, black, IP66/67



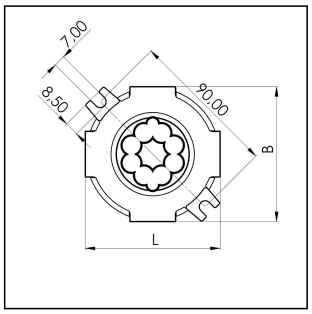

Products may differ in size, colour and appearance to those shown. If you require further information or customisation, please contact us directly.

WISKA-Order no.	10111247
Type	COMBI MAR 304 SWITCH RS/1-2 BK
Voltage max. (V)	250 V
Current	16 A
Protection class	IP66 / IP67
Glow wire test	960 °C
Material	Polypropylene
Type of cable gland	M 20 x 1,5
Mounting	Surface mounting
Temp. range min	-30 °C
Temp. range max	55 °C
Type of switch	On-Off, 2-pole
Colour	Black
Variations	on request

Spare parts

SP-1842 Switch interior, 2-pole, 10A	22000354

24.10.2025

Your Contact:
WISKA Hoppmann GmbH
Kisdorfer Weg 28 · 24568 Kaltenkirchen · Germany
☎ +49-4191-508-0 · 🖷 +49-4191-508-209
contact@wiska.de · www.wiska.com

Other technical data on request / subject to change without notice

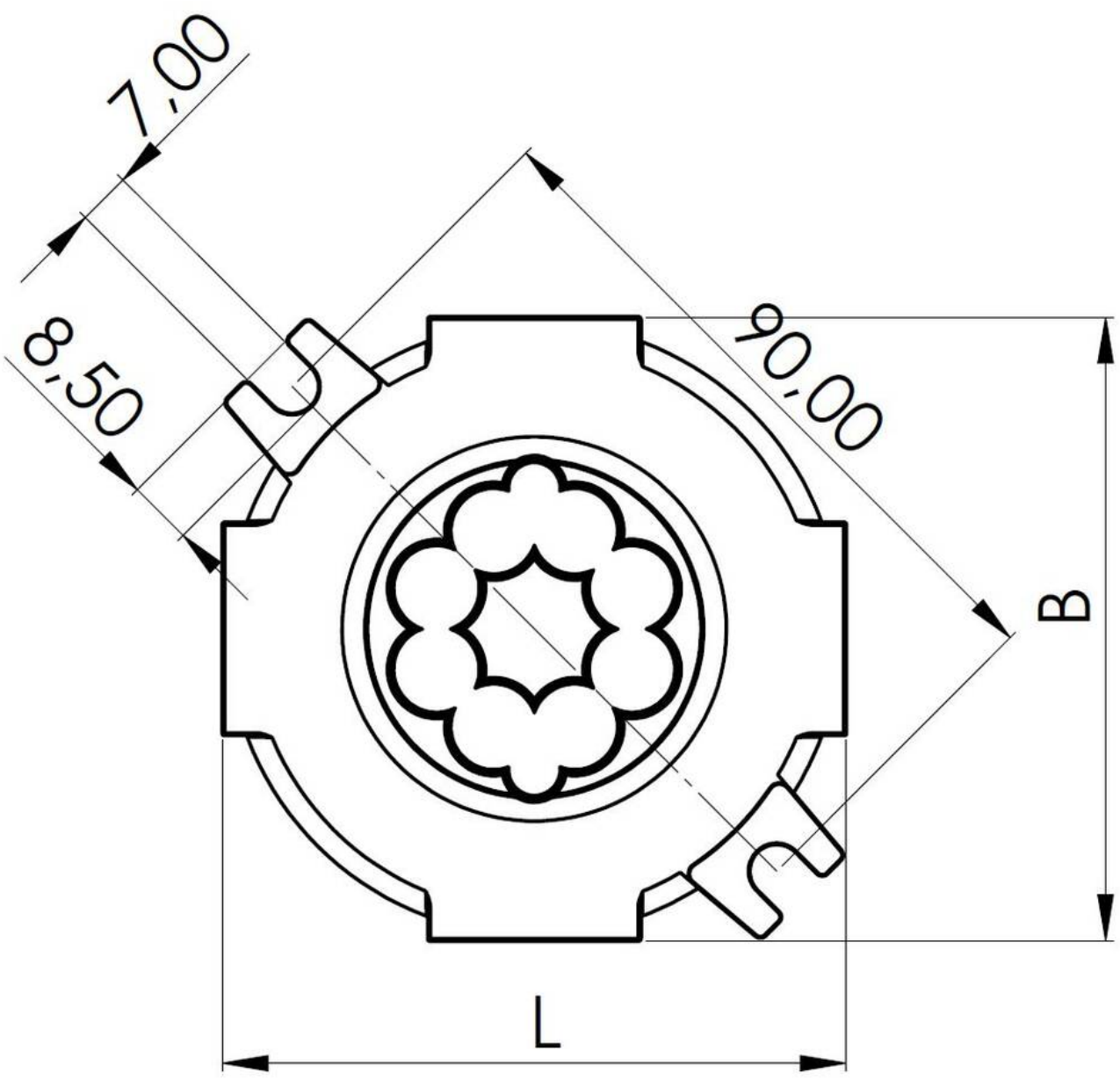

Your Contact:
WISKA Hoppmann GmbH
Kisdorfer Weg 28 · 24568 Kaltenkirchen · Germany
☎ +49-4191-508-0 · 🖷 +49-4191-508-209
contact@wiska.de · www.wiska.com

Other technical data on request / subject to change without notice