DYNAMIC SLI

570144064K262



Conventional vehicles without Start-Stop technology and with basic energy needs.

Experience peace of mind with the VARTA Dynamic SLI, a maintenance-free battery designed to deliver dependable performance. Built with proven technology, it offers long-lasting power and exceptional value, making it the ideal choice for conventional vehicles. VARTA batteries meet all the standards of OE manufacturers. Engineered in Germany, VARTA batteries deliver precision performance and lasting reliability.

VEHICLE KEY BENEFITS

Reliable power	Trusted power for vehicles with standard equipment and no Start-Stop system.
Original equipment spare part	Meets all OE criteria from the vehicle manufacturer.
Engineered in Germany	Engineered with precision and expertise in Germany.
Maintenance-free	Maintenance-free battery designed to deliver dependable performance for your vehicle.

DYNAMIC SLI 570144064K262

TECHNICAL DATA

Capacity:	**70 Ah**	CCA:	**640 A**
Voltage:	**12 V**	Dimensions (L/W/H):	**278/175/175**
Case Size:	**T6/LB3**	Short Code:	**E9**
UK-Code:	**100**	ETN:	**570144064**
Weight filled:	**16,00 kg**	Base Hold-down:	**B13**
Layout:	**0**	Terminal Type:	**1**

DRAWINGS

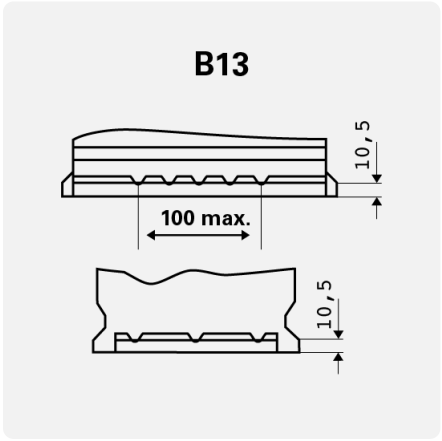

Base Hold-down

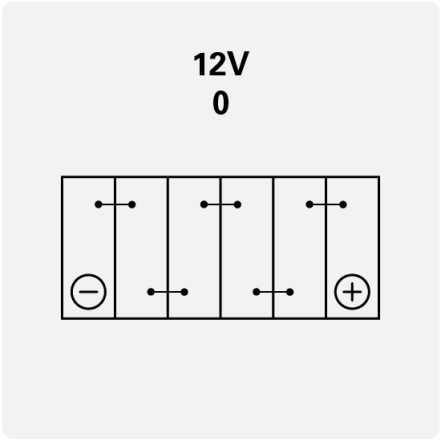

Layout

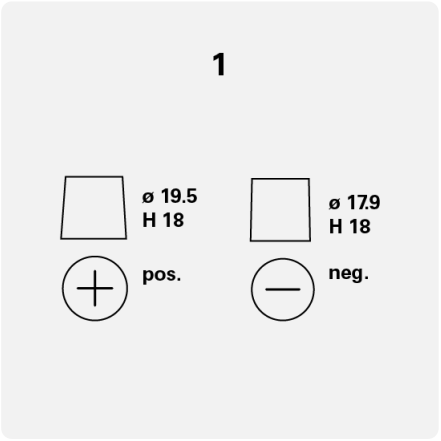

Terminal Type