CBLL Series - Cabin Bunk LED Light 8Watt 800Lumens

Cabin bunk light is a bed-, bunk or desk light for interior use. Standard supplied with dimmable driver and double USB ports. Available in anthracite grey and white.

100LM/W | IP20 | USB | 85-265 Vac | 10-30 Vdc | Dimmable

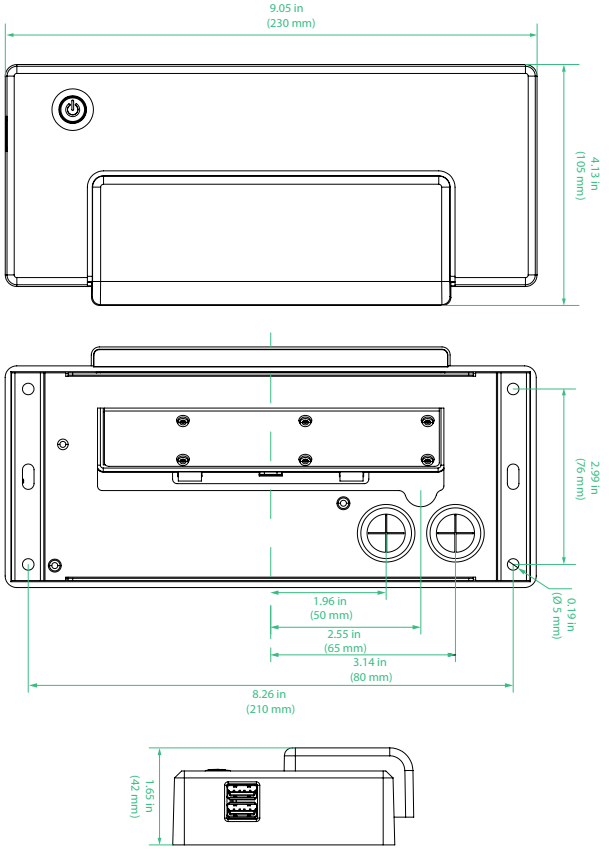

Technical Information

Material:	Polyamide (PA) and polycarbonate cover
Lens:	90°
IP Rating:	IP20
Light Source:	8Watt
	100Lumens per Watt
	3.000K Warm White
	CRI > 85
Power Source:	85-265Vac 50-60Hz or 10-30Vdc
	Ply Power LAG20-18U
	Short circuit protection
	Potted driver
USB:	2 × 5V/1A USB A + USB C
Ambient Operating Temperature:	-10°C ~ +45°
Installation:	Internal 3-pole power terminal
Mounting:	Surface mount
Fixture weight:	0,4 kg





Compliances
In compliance with rules of maritime classification societies, additional VDE and IEC 60092-306.
(Equipment luminaires and lighting accessories for use on vessels)

Special Projects
We may be able to accommodate your special projects, so please don't hesitate to ask about additional options. Minimum order quantities and/or extended leadtimes will apply. Contact your E-LED Lighting representative with specific inquiries.

Product design and specifications are subject to change without notice. The most current specification sheets can be found at www.E-LEDLighting.com.