DC Tube for external drivers
LED T5 NEO 14/24 865/G5

Radium

Product Datasheet Date: 29.10.2026

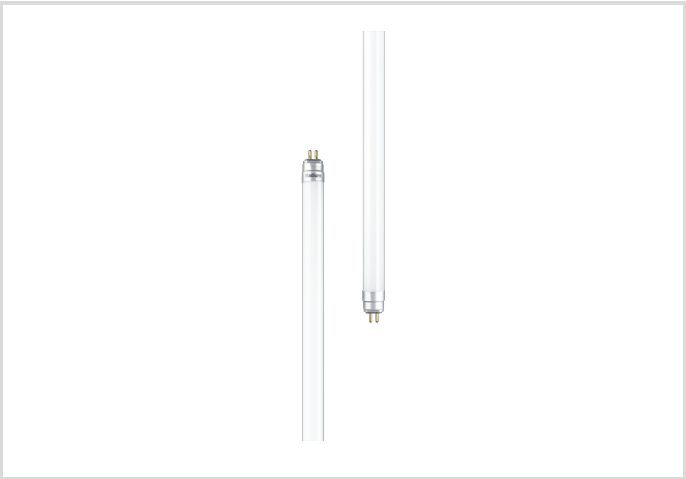

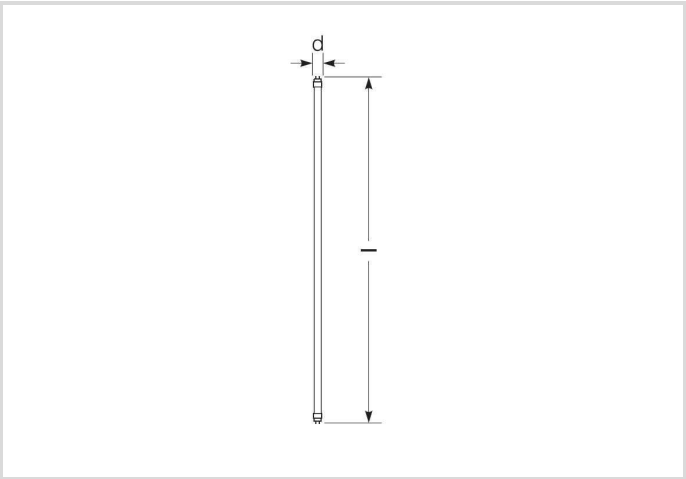

C	1800	6500K	90 000h	Dimmable	5 YEARS GUARANTEE

General Data

Article No.	43720827
Code	RL-T5 14/24 NEO 865/G5 DC
Product EAN	4008597208270
Box quantitiy (pcs.)	10
EAN Box	4008597508271
Gross weight of box in kg	0.987
Length of box in m	0.63
Width of box in m	0.155
Height of box in m	0.08
Product weight	64 g
Product status	Active

Electric Parameters

Wattage	10.0 W
Lamp nominal wattage	10 W
Weighted energy consumption in 1000 hours	10 kWh
Lamp power	5.7-10.0 W
Power factor	1

DC Tube for external drivers
LED T5 NEO 14/24 865/G5

Radium

Electric Parameters

Nominal voltage	28.5-28.5 V
Lamp voltage	28.5 V
Voltage type	DC
Nominal current	200-350 mA
dimmable	Yes

Light Application Parameters

Rated lamp luminous flux	1800 lm
Luminous flux	1060-1800 lm
max. luminous flux	1800 lm
Lumen-Output mark	HE / HO
Beam angle	220 °
Efficacy / Luminous efficiency	180 lm/W
Total mains efficacy	167 lm/W
Light colour	daylight
Color temperature	6500 K
Color coordinate X	0.3123
Color coordinate Y	0.3283
Color rendering index	> 80
Color Stability	≤ 5 sdcm

Service Life

Average life	90000 h
Tc Temperature max.	95 °C
Mean service life	90000 h
Life L70B10	90000 h
Life L80B10	60000 h
Min. number of switching cycles	20000
Guarantee	5 years

Specification

Energylabel (G -> A)	C
Diameter	17 mm
Tube diameter	15.7 mm
Length	549 mm
Length	549 mm

DC Tube for external drivers
LED T5 NEO 14/24 865/G5

Radium

Specification

Burning position	any
Mercury content	0.0 mg
Shatterproof	No
Lamp shape	Tube, double-ended
Base	G5
Material	Glass
Colour	White

Notes on Operation

IP Class (Room/Ceiling)	IP20
Burning position	any
Mode of operation	DC
Range of storage temperature	-20 ... +60°C
Ambient temperatures	-20 ... +45°C
Tc Temperature max.	95 °C
With movement sensor	No

Information especially for EPREL

Lighting technology	LED
Mains/Non mains connectable	NMLS
Directional or non-directional light	NDLS
Color tunable light source	No
Type of color temperature	SINGLE_VALUE
Color stability MacAdams EPREL	5
Displacement factor EPREL	1
Life factor EPREL	0.9
Lumen maintenance EPREL	0.93
EPREL ID number	1593991

Miscellaneous

Similar products	43720826

Notes

T5 LED tube for external LED driver, replacement with fluorescent lamps, light color daylight, glass bulb, dimmable, G5 base

Please, refer to www.radium.de/recycling for notes on disposal of burned-out lamps as well as lamp breakage.
The "lifespan L70" described for LED lamps indicates the number of hours when the luminous flux has decreased to 70% of its initial value.
The optinal field 'info about service life' contains the frame conditions according to standards based on which the specific service life has been determined. So, for example, "12B50, 50Hz" means that the mean service life (B50) has been determined with a 12h switching cycle at mains (frequency 50Hz), "3B50, HF" is based on a 3h switching cycle at electronic control gear (high frequency).

DC Tube for external drivers
LED T5 NEO 14/24 865/G5

Radium

Base



G5
IEC/EN 60061-1
sheet 7004-52-5

Spectrum

As daylight is a mixture of direct sunlight and light from the sky, the spectral distribution changes all the time due to the time of the day and the weather. The standard illuminant D65 corresponds to daylight with colour temperature of about 6500K.
The colour of coloured LEDs depends on the chemical elements within the light generating chip. The coloured light is generated directly and does not need filtering.
White LEDs are either RGB (red + green + blue chip in one LED = light colour white) or blue LED-chips with yellow/orange phosphor in the resin.
Visible region from 380 to 780 nm; height of graph corresponding with relative spectral emission (400mW/klm)per 10nm.

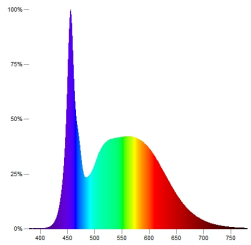

LED-NEO-Tubes 6500K, Replacements for fluorescent lamps

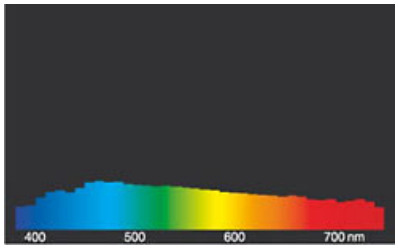

daylight(D 65)

Special features



General notes

Please note the installation instructions when replacing fluorescent lamps with LED tubes. Some LED lamp types are only suitable for 1: 1 replacement at the reespective burning position: with CCG by using the enclosed starter, with ECG with compatible control gear. Others can be operated directly on 230V (conversion of the luminaire), others again can 'do' CCG as well as 230V or all 3 variations. Neo tubes need an external LED driver (replacement of the control gear). LED Neo tubes are dimmable, all other LED tubes are not dimmable.

The technical design data in accordance with DIN and IEC. The producer does not take any responsibility for damage to persons or property in case of unsuitable operation or handling of the product. Operating data and dimensions are valid within the usual tolerances. Related lamp types (different bases, mains voltages) may be available on request. Sale and delivery are effected in accordance with the Radium Terms of Delivery and Payment valid on the day of conclusion of contract. Packing units offer economical advantages to the purchase and logistic department. Please match your quantity volume accordingly. For orders of a minimum quantity (clefts) with a lamp model the amount lower than the volume of each packaging unit, we will invoice 10 % additional charge per lamp type. Technical changes and terms of delivery are reserved. Manipulation of any kind to packaging or product is not permissible as this will violate Radium brand rights. Furthermore, technical properties of the product can change to its disadvantage or even destruction. Therefore, Radium cannot be responsible for consequential damages.
® = Registered trademark
Subject to change without notice. Errors and omissions excepted.

Safety instructions

To ensure full light efficiency and product life, the permissible temperature ranges must be observed and dry environment ensured. When operated with existing control gear, their compatibility with the lamp must be checked.

All technical data without guarantee.