# LED Essence Tube
RL-T8 18 840/G13 EM

Radium

Product Datasheet Date: 29.10.2026




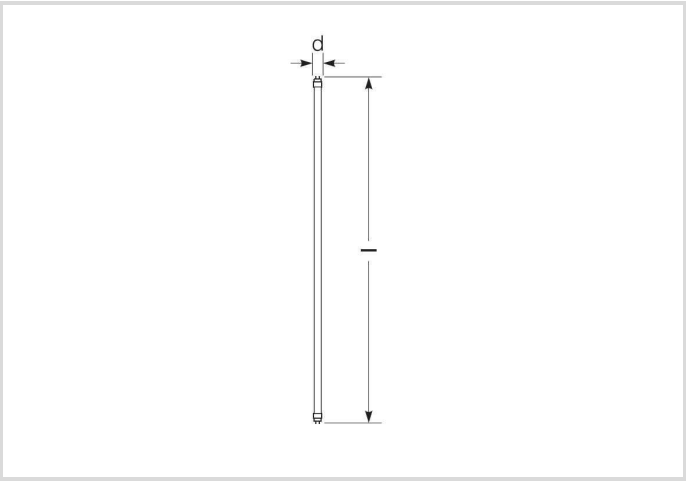


E | 4000K | 50 000h | 3 YEARS GUARANTEE

## General Data

| | |
|---|---|
| Article No. | 43919875 |
| Code | RL-T8 18 840/G13 EM |
| Product EAN | 4008597198755 |
| Box quantitiy (pcs.) | 25 |
| EAN Box | 4008597498756 |
| Gross weight of box in kg | 3.58 |
| Length of box in m | 0.705 |
| Width of box in m | 0.175 |
| Height of box in m | 0.18 |
| Product weight | 105 g |
| Product status | Active |

## Electric Parameters

| | |
|---|---|
| Wattage | 6.3 W |
| Weighted energy consumption in 1000 hours | 7 kWh |
| Lamp power | 6.3-6.3 W |
| Power factor | > 0.9 |
| Power factor | 0,9 |

# LED Essence Tube
RL-T8 18 840/G13 EM

Radium

## Electric Parameters

| | |
|---|---|
| Nominal voltage | 220-240 V |
| Voltage type | AC |
| Nominal current | 31-31 mA |
| Nominal current (mA) | 31 mA |
| dimmable | No |

## Light Application Parameters

| | |
|---|---|
| Luminous flux | 850 lm |
| Rated luminous flux according to IEC 62612 | 850 lm |
| Luminous flux | 850 lm |
| Beam angle | 200 ° |
| Efficacy / Luminous efficiency | 129 lm/W |
| Total mains efficacy | 129 lm/W |
| Color temperature | 4000 K |
| Color coordinate X | 0.380 |
| Color coordinate Y | 0.380 |
| Color rendering index | ≥ 80 |
| Color rendering index nominal | 80 |
| Color Stability | ≤ 5 sdcm |

## Service Life

| | |
|---|---|
| Average life | 50000 h |
| Mean service life | 50000 h |
| max. temperature at Tc -point for nominal life with CCG or 230V AC | 60 °C |
| Min. number of switching cycles | 200000 |
| Lamp survival factor at 6000h | ≥ 0.90 |
| Early failure rate at 1000h | ≤ 5.0 % |
| Guarantee | 3 years |

## Specification

| | |
|---|---|
| Energylabel (G -> A) | E |
| Diameter | 26,7 mm |
| Tube diameter | 26 mm |
| Length | 600 mm |
| Length | 600 mm |
| Burning position | any |

# LED Essence Tube
RL-T8 18 840/G13 EM

Radium

## Specification

| | |
|---|---|
| Mercury content | 0.0 mg |
| Shatterproof | No |
| Photobiological safety according to EN 62471 | RG0 |
| Lamp shape | Tube, double-ended |
| Base | G13 |
| Material | Glass |
| Colour | White |

## Notes on Operation

| | |
|---|---|
| IP Class (Room/Ceiling) | IP 20 |
| Burning position | any |
| Mode of operation | CCG, 230V |
| suitable for tandem circuit | Yes |
| Ambient temperatures | -20 … +45 °C |
| max. temperature at Tc -point for nominal life with CCG or 230V AC | 60 °C |
| With movement sensor | No |

## Information especially for EPREL

| | |
|---|---|
| Lighting technology | LED |
| Mains/Non mains connectable | MLS |
| Directional or non-directional light | NDLS |
| Color tunable light source | No |
| Type of color temperature | SINGLE_VALUE |
| Color stability MacAdams EPREL | 5 |
| Displacement factor EPREL | 0.90 |
| Life factor EPREL | 0.90 |
| Lumen maintenance EPREL | 0.70 |
| Flicker | 1.0 |
| Stroboscopic effect | 0.4 |
| EPREL ID number | 1654216 |

## Miscellaneous

| | |
|---|---|
| Similar products | 43920128, 43719796, 43719720, 43719790 |

# LED Essence Tube
RL-T8 18 840/G13 EM

Radium

## Notes

T8 LED tube for exchange with FL, neutral white light, glass bulb, non-dim, base G13. Suitable for serial connection. Note installation instructions!

Please, refer to www.radium.de/recycling for notes on disposal of burned-out lamps as well as lamp breakage.
The "lifespan L70" described for LED lamps indicates the number of hours when the luminous flux has decreased to 70% of its initial value.
The optinal field 'info about service life' contains the frame conditions according to standards based on which the specific service life has been determined. So, for example, "12B50, 50Hz" means that the mean service life (B50) has been determined with a 12h switching cycle at mains (frequency 50Hz), "3B50, HF" is based on a 3h switching cycle at electronic control gear (high frequency).

### Base

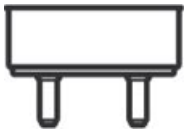

G13
IEC/EN 60061-1
sheet 7004-51-8

### Spectrum

As daylight is a mixture of direct sunlight and light from the sky, the spectral distribution changes all the time due to the time of the day and the weather. The standard illuminant D65 corresponds to daylight with colour temperature of about 6500K.
The colour of coloured LEDs depends on the chemical elements within the light generating chip. The coloured light is generated directly and does not need filtering.
White LEDs are either RGB (red + green + blue chip in one LED = light colour white) or blue LED-chips with yellow/orange phosphor in the resin.
Visible region from 380 to 780 nm; height of graph corresponding with relative spectral emission (400mW/klm)per 10nm.

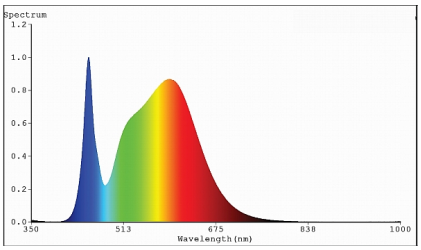


LED retrofit tube lamps for fluorescent lamps 4000K

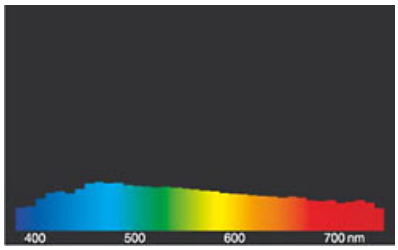


daylight(D 65)

### Special features




### General notes

Please note the installation instructions when replacing fluorescent lamps with LED tubes. Some LED lamp types are only suitable for 1: 1 replacement at the reespective burning position: with CCG by using the enclosed starter, with ECG with compatible control gear. Others can be operated directly on 230V (conversion of the luminaire), others again can 'do' CCG as well as 230V or all 3 variations. Neo tubes need an external LED driver (replacement of the control gear). LED Neo tubes are dimmable, all other LED tubes are not dimmable.

The technical design data in accordance with DIN and IEC. The producer does not take any responsibility for damage to persons or property in case of unsuitable operation or handling of the product. Operating data and dimensions are valid within the usual tolerances. Related lamp types (different bases, mains voltages) may be available on request. Sale and delivery are effected in accordance with the Radium Terms of Delivery and Payment valid on the day of conclusion of contract. Packing units offer economical advantages to the purchase and logistic department. Please match your quantity volume accordingly. For orders of a minimum quantity (clefts) with a lamp model the amount lower than the volume of each packaging unit, we will invoice 10 % additional charge per lamp type. Technical changes and terms of delivery are reserved. Manipulation of any kind to packaging or product is not permissible as this will violate Radium brand rights. Furthermore, technical properties of the product can change to its disadvantage or even destruction. Therefore, Radium cannot be responsible for consequential damages.
® = Registered trademark
Subject to change without notice. Errors and omissions excepted.

### Safety instructions

To ensure full light efficiency and product life, the permissible temperature ranges must be observed and dry environment ensured. When operated with existing control gear, their compatibility with the lamp must be checked.

# LED Essence Tube
RL-T8 18 840/G13 EM

Radium

**All technical data without guarantee.**