LED Essence PAR16 120°
RL-PAR16 50 840/120°/GU10

Radium

Product Datasheet Date: 29.10.2026



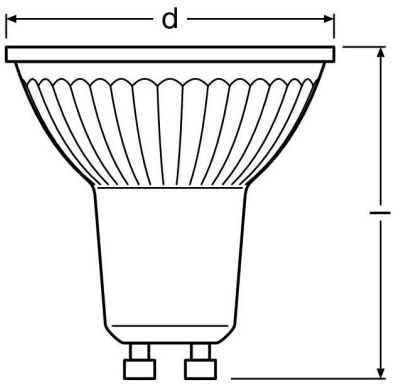

G	4,3	4000K	15 000h

General Data

Article No.	43920768
Code	RL-PAR16 50 840/120°/GU10
Product EAN	4008597207686
Box quantitiy (pcs.)	10
EAN Box	4008597407680
Gross weight of box in kg	0.58
Length of box in m	0.273
Width of box in m	0.113
Height of box in m	0.07
Product weight	38 g
Product status	Active

Electric Parameters

Wattage	4.3 W
Nominal power	4.3 W
Weighted energy consumption in 1000 hours	5 kWh
Lamp power	4.3-4.3 W
Power factor	≥ 0.5

LED Essence PAR16 120°
RL-PAR16 50 840/120°/GU10

Radium

Electric Parameters

Power factor	0.5
Nominal voltage	220-240 V
Mains Voltage	220 - 240 V
Voltage type	AC
Nominal current	47 mA
Nominal current (mA)	47 mA
Inrush current	6,2 A
max. no. of lamps at 10A-B10 automatic fuse	90
max. no. of lamps at 16A-B16 automatic fuse	143
dimmable	No

Light Application Parameters

Luminous flux	350 lm
Rated luminous flux according to IEC 62612	350 lm
Luminous flux	350 lm
Beam angle	120 °
Luminous intensity	130 cd
Efficacy / Luminous efficiency	81 lm/W
Total mains efficacy	81 lm/W
Color temperature	4000 K
Color coordinate X	0,382
Color coordinate Y	0,380
Color rendering index	≥ 80
Color rendering index nominal	80
Color Stability	≤ 6 sdcm

Service Life

Average life	15000 h
Mean service life	15000 h
No. switching cycles	[100000]
Lamp survival factor at 6000h	≥ 0.90
Early failure rate at 1000h	≤ 5.0 %
Guarantee	4 years

LED Essence PAR16 120°
RL-PAR16 50 840/120°/GU10

Radium

Specification

Energylabel (G -> A)	G
Diameter	50 mm
Length	54 mm
Length	54 mm
Burning position	any
Mercury content	0.0 mg
Photobiological safety according to EN 62471	RG1
Lamp shape	Reflector
Base	GU10
Material	Glass
Colour	White

Notes on Operation

IP Class (Room/Ceiling)	IP 20
Burning position	any
Mode of operation	230 V
Ambient temperatures	-20 … +40 °C
With movement sensor	No

Information especially for EPREL

Lighting technology	LED
Mains/Non mains connectable	MLS
Directional or non-directional light	DLS
Color tunable light source	No
Type of color temperature	SINGLE_VALUE
Color stability MacAdams EPREL	6
Displacement factor EPREL	0.50
Life factor EPREL	0,9
Lumen maintenance EPREL	0,7
Flicker	1.0
Stroboscopic effect	0.4
EPREL ID number	1654307

Miscellaneous

Similar products	43920767, 43920315, 43820072, 43820071, 44022578, 43920766, 43920765

LED Essence PAR16 120°
RL-PAR16 50 840/120°/GU10

Notes

PAR16-LED for exchange with halogen lamps, neutral white light, glass bulb, non-dim, base GU10. LED light does not contain UV or IR radiation.

Please, refer to www.radium.de/recycling for notes on disposal of burned-out lamps as well as lamp breakage.
The "lifespan L70" described for LED lamps indicates the number of hours when the luminous flux has decreased to 70% of its initial value.
The optinal field 'info about service life' contains the frame conditions according to standards based on which the specific service life has been determined. So, for example, "12B50, 50Hz" means that the mean service life (B50) has been determined with a 12h switching cycle at mains (frequency 50Hz), "3B50, HF" is based on a 3h switching cycle at electronic control gear (high frequency).

Base

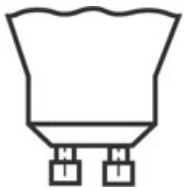

GU10
IEC/EN 60061-1
sheet 7004-121-1

Spectrum

As daylight is a mixture of direct sunlight and light from the sky, the spectral distribution changes all the time due to the time of the day and the weather. The standard illuminant D65 corresponds to daylight with colour temperature of about 6500K.
The colour of coloured LEDs depends on the chemical elements within the light generating chip. The coloured light is generated directly and does not need filtering.
White LEDs are either RGB (red + green + blue chip in one LED = light colour white) or blue LED-chips with yellow/orange phosphor in the resin.
Visible region from 380 to 780 nm; height of graph corresponding with relative spectral emission (400mW/klm)per 10nm.

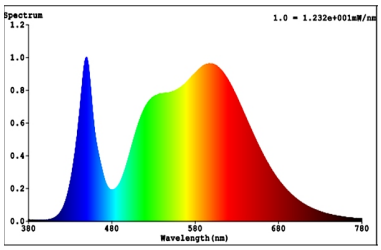

LED Retrofit reflector lamps 4000K

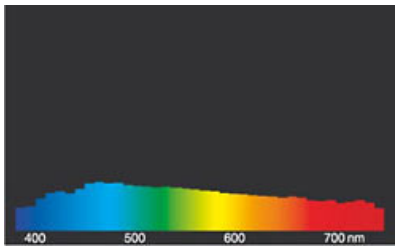

daylight(D 65)

Special features

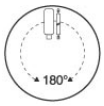







General notes

For LED replacement of halogen and incandescent lamps, we recommend direct replacement (1: 1) at the respective burning position. For new systems, the number of lamps in the circuit operated at control gear such as transformers or dimmers can be obtained from corresponding compatibility lists (if available). If there is no specification for the type of device or lamp required, for safety reasons, the replacement power shall be assumed as taht of the original halogen type (eg "RL-MR16 35" -> 35W, independent of the real power consumption).

The technical design data in accordance with DIN and IEC. The producer does not take any responsibility for damage to persons or property in case of unsuitable operation or handling of the product. Operating data and dimensions are valid within the usual tolerances. Related lamp types (different bases, mains voltages) may be available on request. Sale and delivery are effected in accordance with the Radium Terms of Delivery and Payment valid on the day of conclusion of contract. Packing units offer economical advantages to the purchase and logistic department. Please match your quantity volume accordingly. For orders of a minimum quantity (clefts) with a lamp model the amount lower than the volume of each packaging unit, we will invoice 10 % additional charge per lamp type. Technical changes and terms of delivery are reserved. Manipulation of any kind to packaging or product is not permissible as this will violate Radium brand rights. Furthermore, technical properties of the product can change to its disadvantage or even destruction. Therefore, Radium cannot be responsible for consequential damages.
® = Registered trademark
Subject to change without notice. Errors and omissions excepted.

Safety instructions

To ensure full light efficiency and product life, the permissible temperature ranges must be observed and dry environment ensured. When operated

with existing control gear, their compatibility with the lamp must be checked.

All technical data without guarantee.