FLEX Series - Ex. Atex Marine LED Floodlight 120Watt 15.600Lumens

Ex. Atex certified LED flood lights applicable for decks and technical
in- and outdoor applications.

II 2G Ex eb mb op is IIC T4 Gb
II 2D Ex op is tb IIIC T(95°) Db
IEP 19 ATEX 0714

130LM/W | IP67 | 100-305 Vac | Ex | UL LISTED

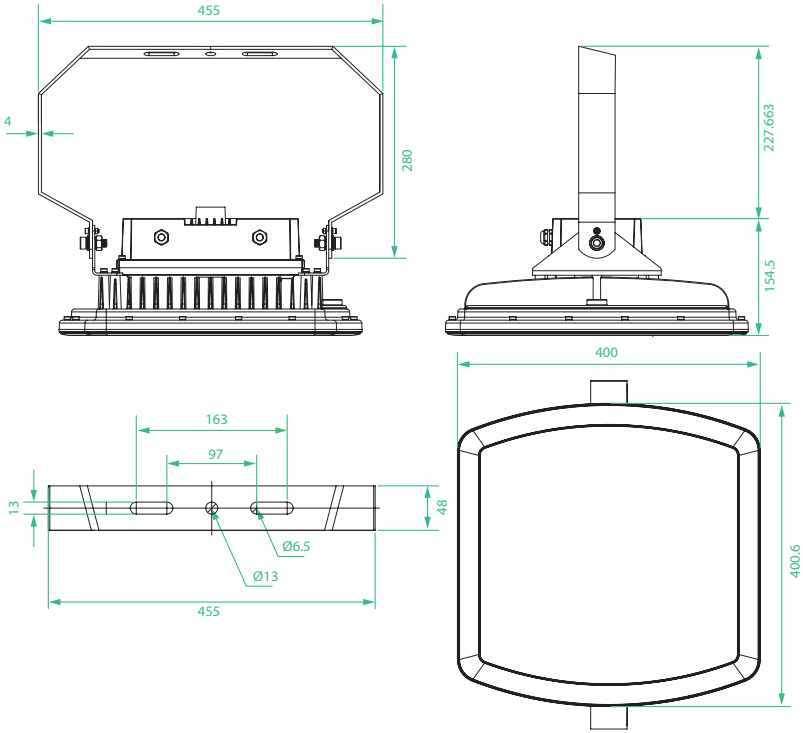

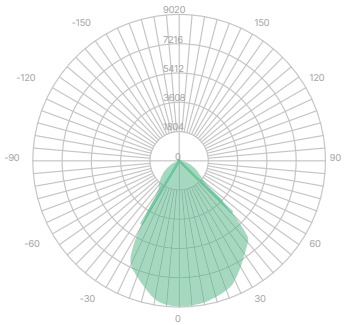

Technical Information

Material:	Powder coated anodized seawater resistant aluminium
Finish:	White
Hardware:	Marine grade A4 316 stainless steel
Lens:	100°
IK Rating:	IK10
IP Rating:	IP67
Light Source:	120Watt
	130Lumens per Watt
	Natural White 3900K
	CRI > 85
Power Source:	100-305Vac 50-60Hz
	Overlead, over-voltage, over-temperature and short circuit protection
	Double isolated driver
Ambient Operating Temperature:	-40°C ~ +55°
Cable Entry:	1 x M25 Cable Gland A4 316 stainless steel Ex. Atex certified
Mounting:	Adjustable A4 316 Stainless Steel bracket
	5mm thickness
Fixture weight:	13,1 kg



Compliances
ATEX certification | UL844 | UL1598A
In compliance with rules of maritime classification societies, additional VDE and IEC 60092-306.
(Equipment luminaires and lighting accessories for use on vessels)

Special Projects
We may be able to accommodate your special projects, so please don't hesitate to ask about additional options. Minimum order quantities and/or extended leadtimes will apply. Contact your E-LED Lighting representative with specific inquiries.

Product design and specifications are subject to change without notice. The most current specification sheets can be found at www.E-LEDLighting.com.