FLLB Series

Flood LED Light Bar 60Watt 8.400Lumens

LED flood lights applicable for decks and technical in- and outdoor applications. Supplied with an external dimmable driver. Available with 360° rotatable bracket or stacking brackets.

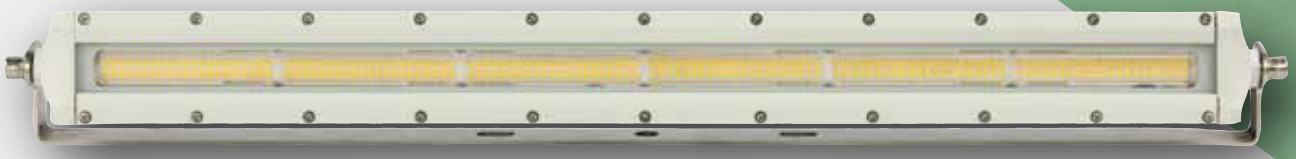

Dimensions

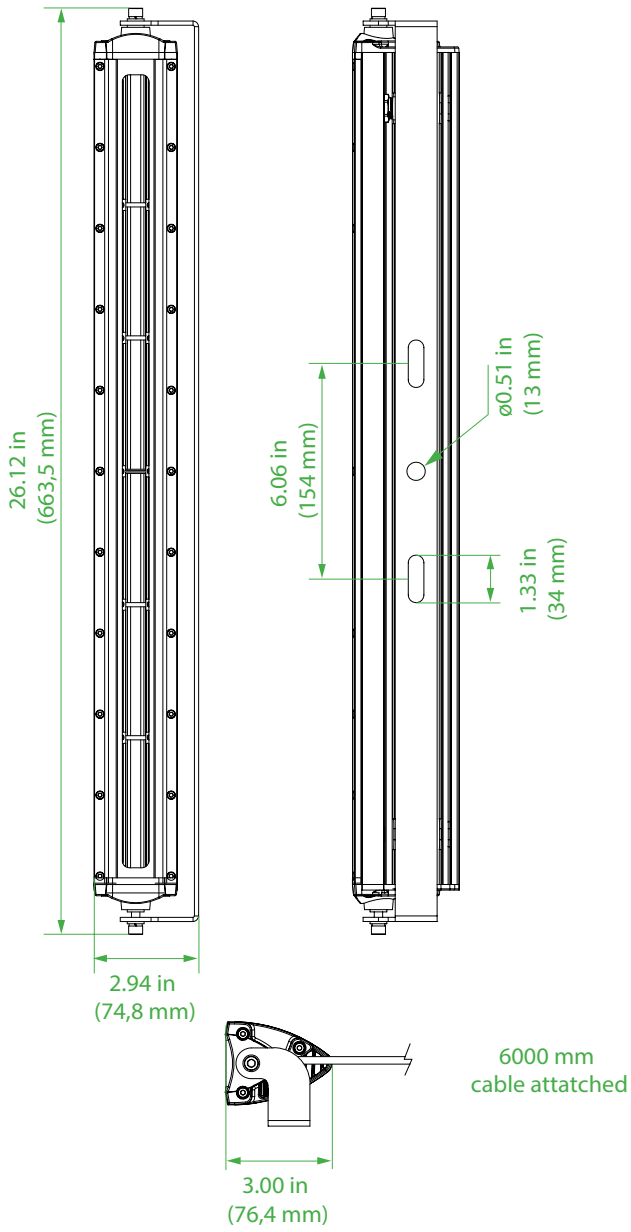

Technical Information

Material:	Powder coated anodized seawater resistant aluminium
	White Trim Ring (optional colours on request *1)
Finish:	White
Hardware:	Marine grade A4 316 stainless steel
Lens:	100°
IP Rating:	IP67
Light Source:	60Watt
	140Lumens per Watt
	Natural White 3900K
	CRI > 85
Power Source:	External driver
	100-305Vac 50 ~60Hz (10-30Vdc optional)
	Meanwell HLG-60H-42B
	Dimmable driver (0-10Vdc – PWM – resistance)
	Potted driver
Ambient Temperature:	Operating Temperature -40°C ~ +55°
Cable :	Supplied with 6mtr 2 x 1.5mm power cable to external driver
Mounting:	Adjustable A4 316 Stainless Steel bracket
	4mm thickness (optional 360° rotatable bracket available *1)
	(optional stacking brackets available *2)
Fixture weight:	10.03 lbs (4,55 kg)

Compliances

In compliance with rules of maritime classification societies, additional VDE and IEC 60092-306.
(Equipment luminaires and lighting accessories for use on vessels)

E-LED Lighting BV & Inc.
European Office: Tel: +31 (0)346 28 62 62, E-mail Info@E-LEDLighting.com
United States Office: Tel: +1 (561) 776-1702, E-mail Info@E-LEDLighting.com