FLNG Series

Marine LED Floodlight 100Watt 100-305Vac 16.000Lumens

LED flood lights applicable for decks and technical in- and outdoor applications.



Dimensions

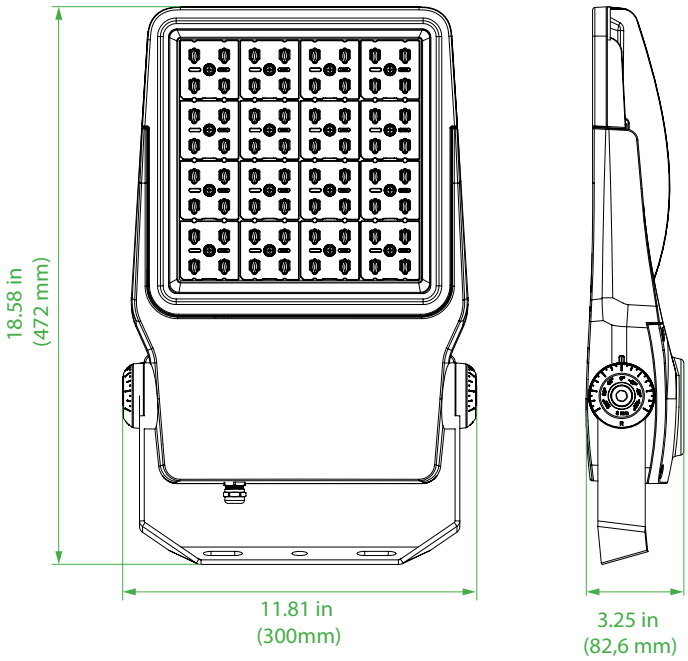

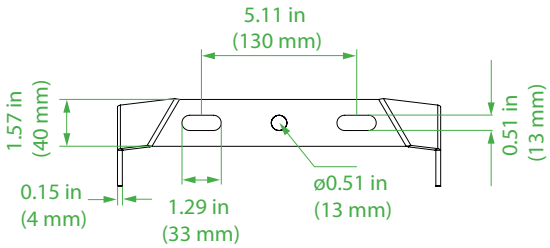

Technical Information

Material:	Powder coated anodized seawater resistant aluminium
Finish:	White
Hardware:	Marine grade A4 316 stainless steel
Lens:	90° standard, 30°- and 60° optional
IP Rating:	IP67
Light Source:	100Watt
	160Lumens per Watt
	Natural White 3900K
	CRI > 85
Power Source:	Meanwell HLG-120H-C500B
	90-305Vac 50~60Hz
	Dimmable driver (0-10Vdc – PWM – resistance)
	Overload, over-voltage, over-temperature and short circuit protection.
	Potted driver
Ambient Temperature:	Operating Temperature -40°C ~ +55°C
Cable Entry:	1 x M20 Cable Gland Nickel plated brass
Mounting:	Adjustable A4 316 Stainless Steel bracket
	0.23 in (6 mm) thickness
Fixture weight:	15.21 lbs (6,9 kg)

Compliances

In compliance with rules of maritime classification societies, additional VDE and IEC 60092-306.
(Equipment luminaires and lighting accessories for use on vessels)

E-LED Lighting BV & Inc.
European Office: Tel: +31 (0)346 28 62 62, E-mail Info@E-LEDLighting.com
United States Office: Tel: +1 (561) 776-1702, E-mail Info@E-LEDLighting.com