FLNG Series - Marine LED Floodlight 100Watt 100-305Vac 16.000Lumens

LED flood lights applicable for decks and technical in- and outdoor applications.

160LM/W | IP67 | 90-305 Vac | 20-30 Vdc | Dimmable

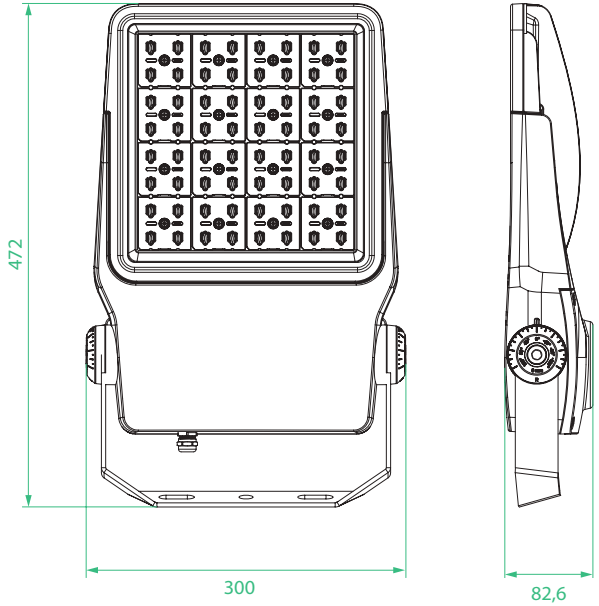

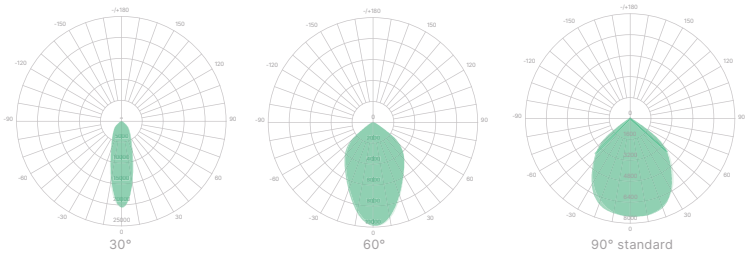

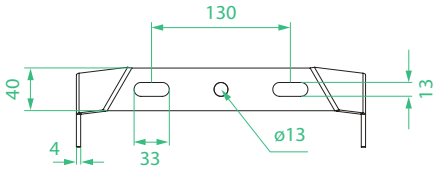

E-LED Lighting B.V. & Inc.
www.e-ledlighting.com

European Office Tel: +31 346 28 62 62
United States Office Tel: +1 561 776 1702

Technical Information

Material:	Powder coated anodized seawater resistant aluminium
Finish:	White
Hardware:	Marine grade A4 316 stainless steel
Lens:	90° standard, 30°- and 60° optional
IP Rating:	IP67
Light Source:	100Watt
	160Lumens per Watt
	Natural White 3900K
	CRI > 85
Power Source:	100-305Vac 50-60Hz
	Dimmable (0-10V - PWM - Resistance)
	Overload, over-voltage, over-temperature and short circuit protection.
Ambient Temperature:	Operating temperature -40°C ~ +55°
Cable Entry:	1 x M20 Cable Gland Nickel plated brass
Mounting:	Adjustable A4 316 Stainless Steel bracket
	6mm thickness
Fixture weight:	4,2kg



Compliances
In compliance with rules of maritime classification societies, additional VDE and IEC 60092-306. (Equipment luminaires and lighting accessories for use on vessels)

Special Projects
We may be able to accommodate your special projects, so please don't hesitate to ask about additional options. Minimum order quantities and/or extended leadtimes will apply. Contact your E-LED Lighting representative with specific inquiries.

Product design and specifications are subject to change without notice. The most current specification sheets can be found at www.E-LEDLighting.com.