LED Lighting by Mast

Shiplight.no

LTPT Series

LED Tube Tri-Proof Light 10Watt 1.500Lumens

LED Tube Tri-Proof Light fixtures for exterior applications such as decks and deck rails. Due the water tightness the LTPT series can be installed on the roughest areas on deck.



Dimensions

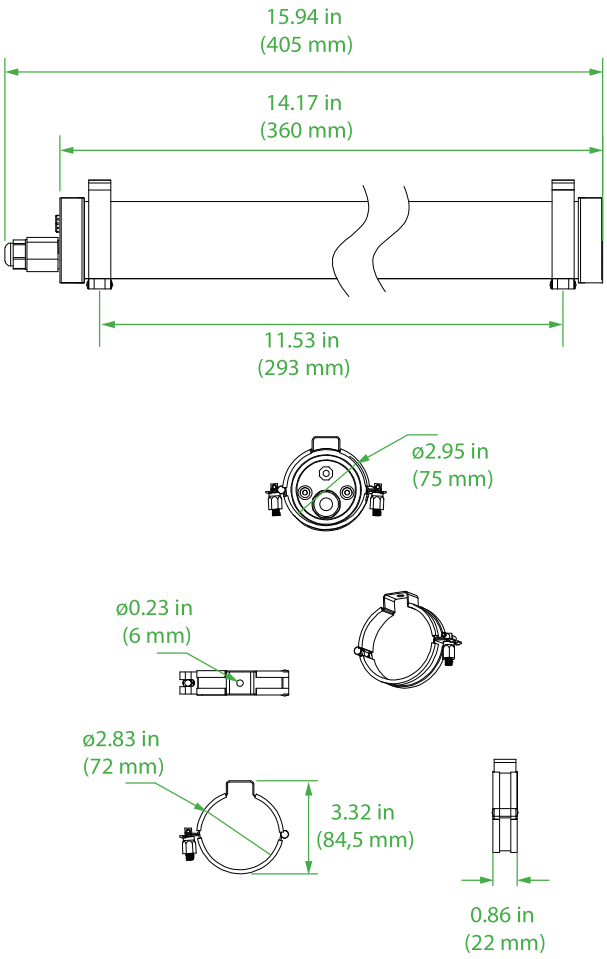

Installation brackets can be installed on side caps- or on the polycarbonate cover

Technical Information

Material:	A4 316 stainless steel end caps and polycarbonate cover
Hardware:	Marine grade A4 316 stainless steel
Lens:	180°
IP Rating:	IP69K
Light Source:	10Watt
	150Lumens per Watt
	Natural White 3900K
	CRI > 85
Power Source:	100-277Vac 50~60Hz
	Boke BK-BHL022-0600AM
	Overload, over-voltage, over-temperature and short circuit protection.
	Potted driver
Ambient Temperature:	Operating temperature -40°C ~ +55°
Cable Entry:	2 x M20 fast connecting glands with internal 3-pole terminal block - *1
Mounting:	Movable A4 316 Stainless Steel brackets
Fixture weight:	1.98 lbs (0,9 kg)

Compliances

In compliance with rules of maritime classification societies, additional VDE and IEC 60092-306.
(Equipment luminaires and lighting accessories for use on vessels)

Olsen Batterier AS
Blindheim Industrivei 2E, 6020 Ålesund
Tlf: +47 48 88 40 20, e-post: post@olsenbatterier.no

LTPT Series

LED Tube Tri-Proof Light 10Watt 1.500Lumens

Ordering information

Article No.:	Beam Angle	Light Colour	Voltage	Finish	Specialties
LTPT-10W-39-29-HV	Wide beam 180°	3900K Natural White	100-277Vac 50~60Hz	Transparent White	Standard supplied with 2pcs fast connecting glands.

*1: Fast connecting glands with 3-pole terminal block:
The use of the fast connecting gland allows wiring the light without opening the fixture.

Special Projects

We may be able to accommodate your special projects, so please don't hesitate to ask about additional options. Minimum order quantities and/or extended lead times will apply. Contact your E-LED Lighting representative with specific inquiries.

Product design and specifications are subject to change without notice. The most current specification sheets can be found at www.E-LEDLighting.com

Olsen Batterier AS
Blindheim Industrivei 2E, 6020 Ålesund
Tlf: +47 48 88 40 20, e-post: post@olsenbatterier.no