LTPT Series

LED Tube Tri-Proof Light 20Watt 3.000Lumens



LED Tube Tri-Proof Light fixtures for exterior applications such as decks and deck rails. Due the water tightness the LTPT series can be installed on the roughest areas on deck. Standard supplied with 2 x M25 fast connecting glands on both ends for connection in series. Available with 5Watt 20-30Vdc emergency circuit.

Dimensions

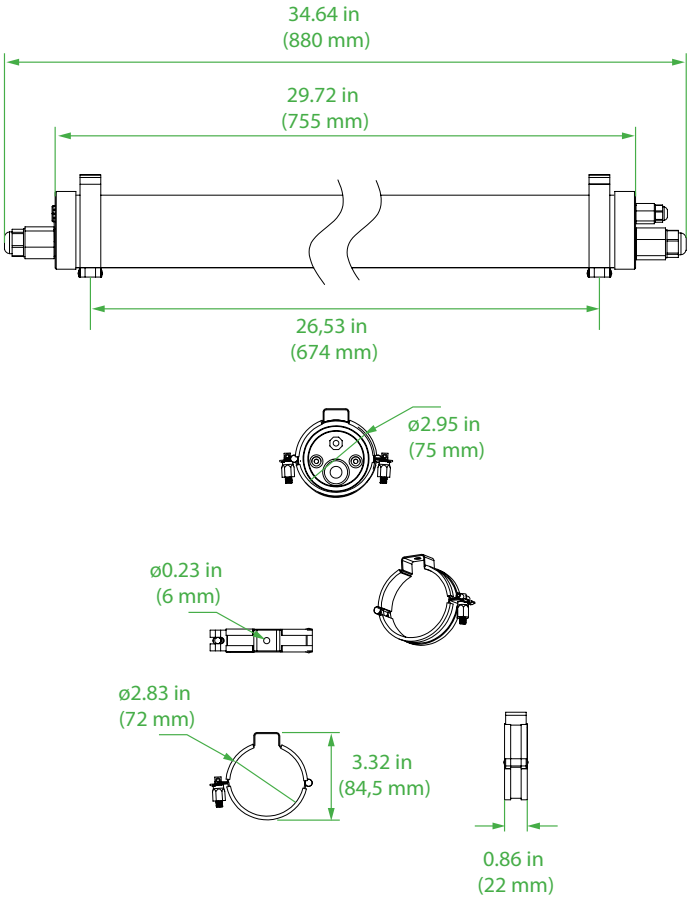

Installation brackets can
be installed on side caps-
or on the polycarbonate cover

Technical Information

Material:	A4 316 stainless steel end caps and polycarbonate cover
Hardware:	Marine grade A4 316 stainless steel
Lens:	180°
IP Rating:	IP69K
Light Source:	20Watt
	150Lumens per Watt
	Natural White 3900K (Blue-, Green or Red available on request)
	CRI > 85
Power Source:	100-277Vac 50~60Hz (20-30Vdc emergency circuit optional or 3 hours battery powered emergency circuit optional)
	Boke BK-BHL042-1100AM
	Overload, over-voltage, over-temperature and short circuit protection.
	Potted driver
Ambient Temperature:	Operating temperature -40°C ~+55°
Cable Entry:	2 x M25 fast connecting glands with internal 5-pole terminal block - *1
Mounting:	Movable A4 316 Stainless Steel brackets
Fixture weight:	3.74 lbs (1,7 kg)

Compliances

In compliance with rules of maritime classification societies,
additional VDE and IEC 60092-306.
(Equipment luminaires and lighting accessories for use on vessels)

E-LED Lighting BV & Inc.
European Office: Tel: +31 (0)346 28 62 62, E-mail Info@E-LEDLighting.com
United States Office: Tel: +1 (561) 776-1702, E-mail Info@E-LEDLighting.com

LTPT Series

LED Tube Tri-Proof Light 20Watt 3.000Lumens

Ordering information

Article No.:	Beam Angle	Light Colour	Voltage	Finish	Specialties
LTPT-20W-39-77-HV	Wide beam 180°	3900K Natural White	100-277Vac 50~60Hz	Transparent White	Standard supplied with 2pcs fast connecting glands
LTPT-20W-39-77-HV+BE	Wide beam 180°	3900K Natural White	100-277Vac 50~60Hz	Transparent White	Standard supplied with 3pcs fast connecting glands and 3H battery powered EMG
LTPT-20W-39-77-HV+E	Wide beam 180°	3900K Natural White	100-277Vac 50~60Hz	Transparent White	Standard supplied with 3pcs fast connecting glands and 20-30Vdc powered EMG
LTPT-20W-BLUE-77-HV	Wide beam 180°	Blue	100-277Vac 50~60Hz	Transparent White	Standard supplied with 2pcs fast connecting glands
LTPT-20W-RED-77-HV	Wide beam 180°	Red	100-277Vac 50~60Hz	Transparent White	Standard supplied with 2pcs fast connecting glands

*1: Fast connecting glands with 5-pole terminal block:
The use of the fast connecting gland allows wiring the light without opening the fixture. The fixtures will be standard supplied with 2 x M25 fast connecting glands installed one on each end.

Special Projects

We may be able to accommodate your special projects, so please don't hesitate to ask about additional options. Minimum order quantities and/or extended lead times will apply. Contact your E-LED Lighting representative with specific inquiries.

Product design and specifications are subject to change without notice. The most current specification sheets can be found at www.E-LEDLighting.com

E-LED Lighting BV & Inc.
European Office: Tel: +31 (0)346 28 62 62, E-mail Info@E-LEDLighting.com
United States Office: Tel: +1 (561) 776-1702, E-mail Info@E-LEDLighting.com