Product Data Sheet

1133/2/P/16A-2xZ14

Switch similar HNA, 16A, brass, IP56



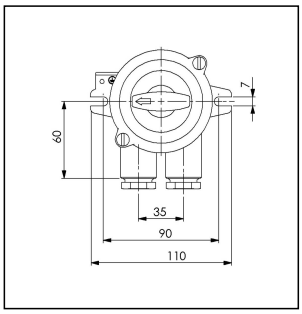

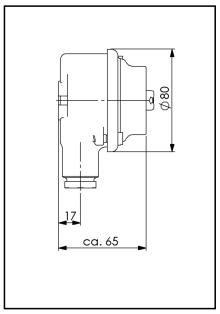

Products may differ in size, colour and appearance to those shown. If you require further information or customisation, please contact us directly.

WISKA-Order no.	10011731
Type	1133/2/P/16A-2xZ14
Voltage	250 V
Current	16 A
Protection class	IP56
Material	Brass
Material cable gland	Brass
Using for cable gland	
Type of cable gland	M 24 x 1,5
Ø cable diameter min	12 mm
Ø cable diameter max	14,5 mm
Type of cable	armoured
Mounting	Surface mounting
Temp. range min	-25 °C
Temp. range max	45 °C
Type of switch	On-Off, 2-pole
Colour	Black
Weight	0,92 kg
Variations	on request
Tariff number	85365080

Spare parts

SP-1842/16A Switch interior, 2-pole	22000355

Your Contact:
WISKA Hoppmann GmbH
Kisdorfer Weg 28 · 24568 Kaltenkirchen · Germany
☎ +49-4191-508-0 · 🖷 +49-4191-508-209
contact@wiska.de · www.wiska.com

Other technical data on request / subject to change without notice

SP-HNA Knob 1842 - 1845	22000639
SP-HNA Cover sealing	22000838

21.11.2025

Your Contact:
WISKA Hoppmann GmbH
Kisdorfer Weg 28 · 24568 Kaltenkirchen · Germany
☎ +49-4191-508-0 · 🖷 +49-4191-508-209
contact@wiska.de · www.wiska.com

Other technical data on request / subject to change without notice

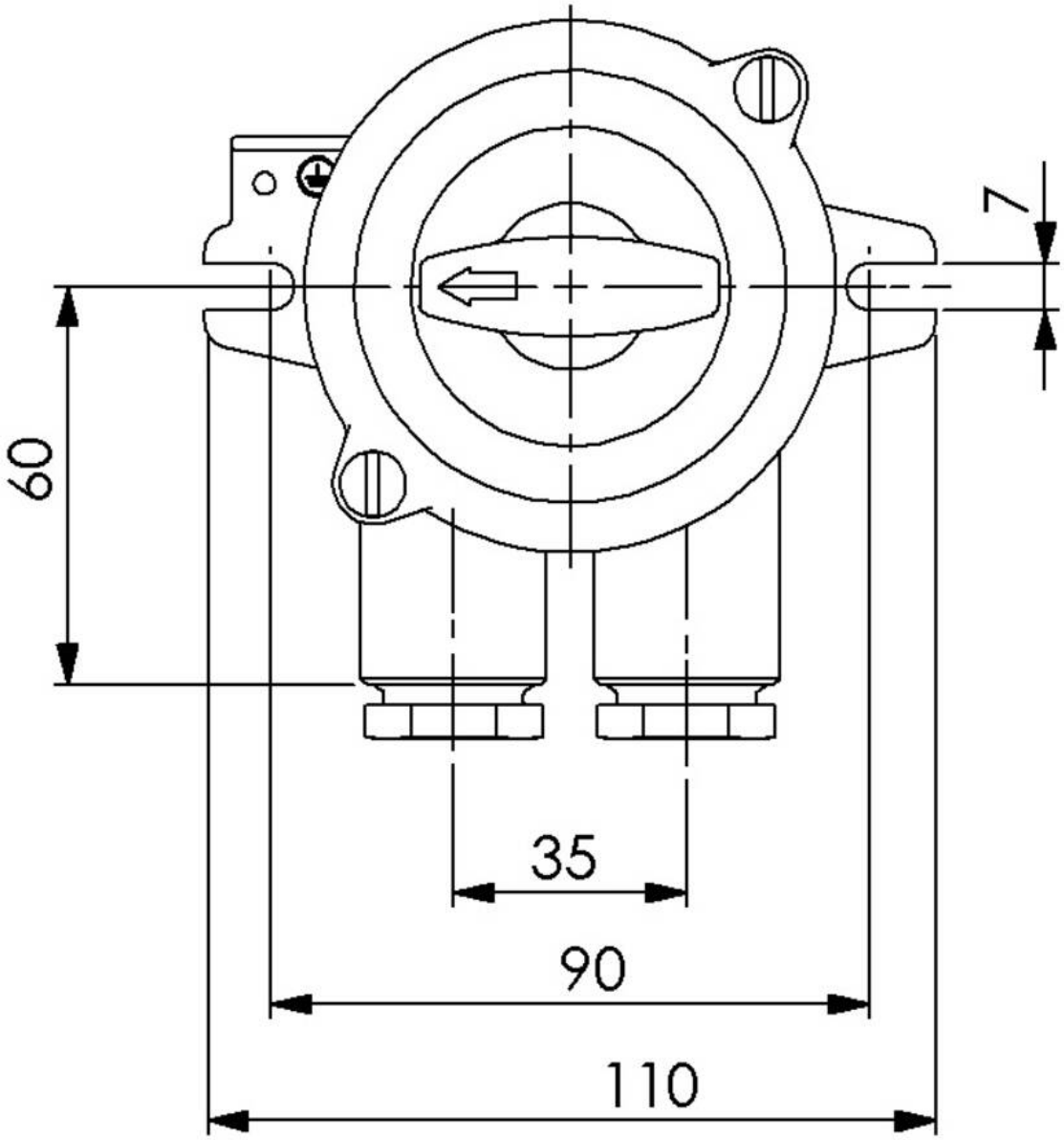

Your Contact:
WISKA Hoppmann GmbH
Kisdorfer Weg 28 · 24568 Kaltenkirchen · Germany
☎ +49-4191-508-0 · 🖷 +49-4191-508-209
contact@wiska.de · www.wiska.com

Other technical data on request / subject to change without notice

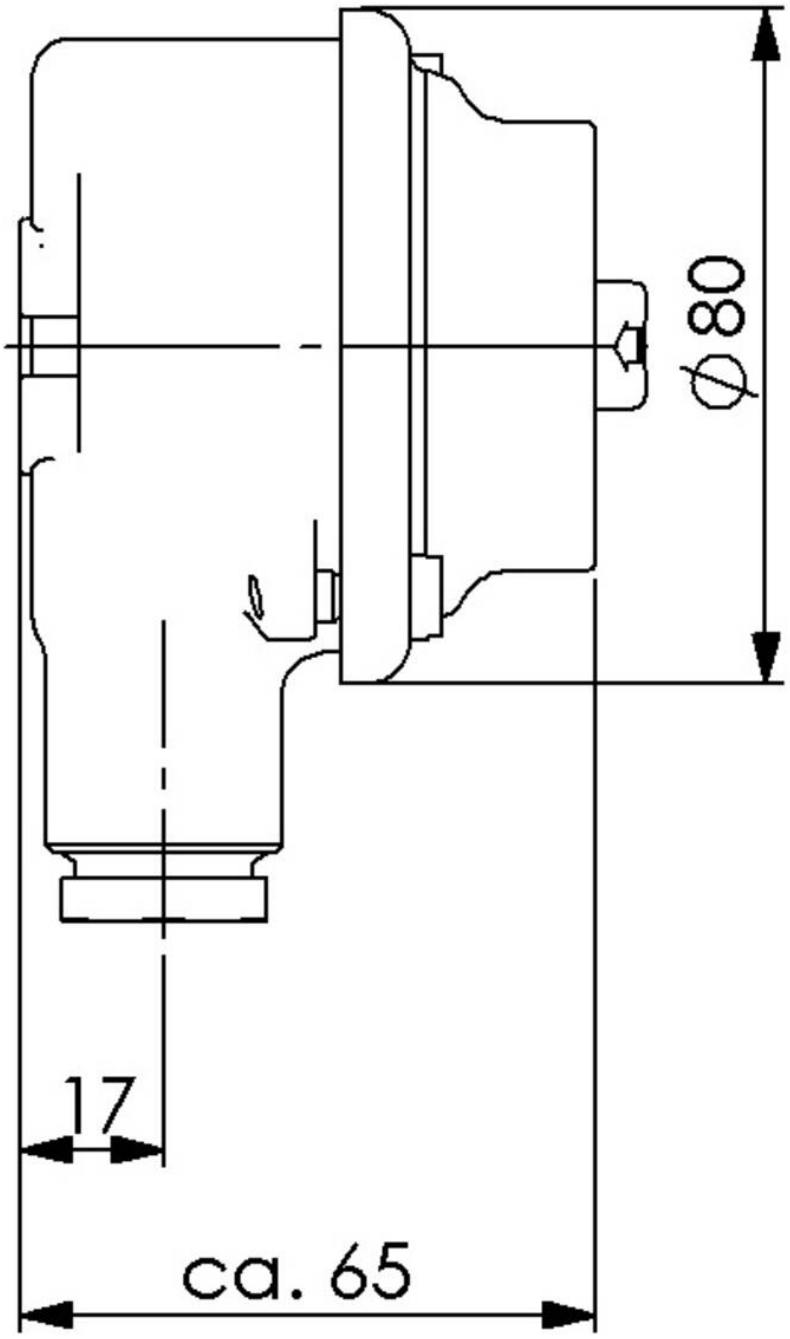

Your Contact:
WISKA Hoppmann GmbH
Kisdorfer Weg 28 · 24568 Kaltenkirchen · Germany
☎ +49-4191-508-0 · 🖷 +49-4191-508-209
contact@wiska.de · www.wiska.com

Other technical data on request / subject to change without notice