2000/LED-M/clear/5W

LED multi-purpose luminare 2000, IP68, plastic, 5W, Cover clear

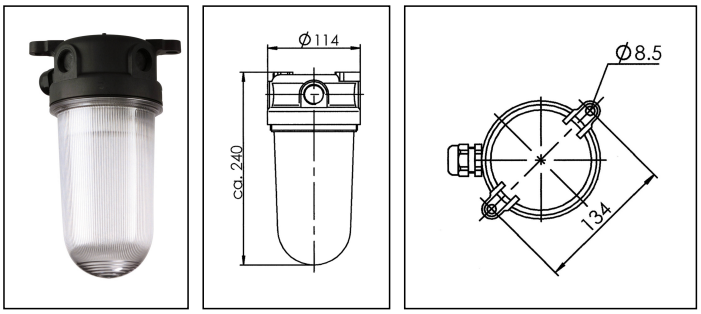

Products may differ in size, colour and appearance to those shown. If you require further information or customisation, please contact us directly.

WISKA-Order no.	10110593
Type	2000/LED-M/clear/5W
Material	PBT
Material globe/diffuser	Polycarbonate
Globe colour	Clear
Power^	1 x 5 W
Wattage	5 W
Voltage	230 V
Protection class	IP68 (2,0 bar 30min)
Temp. range min	-20 °C
Temp. range max	45 °C
Lampholder	LED-M
Lightsource	LED
Lightsource incl.	Yes
Colour temperature	4000 K
Luminous flux	869 lm
Light colour	840 (cool white)
Rated Lifetime	L90/B10 @Ta +45 °C
System Lifetime	50000 h
Material cable gland	Polyamide
Type of cable gland	ESKV 20 PLUS / 7,5-14mm
Using for cable gland	
Ø cable diameter min	7,5 mm
Ø cable diameter max	14 mm
External dimensions LxWxH	134x240mm

Your Contact:
WISKA Hoppmann GmbH
Kisdorfer Weg 28 · 24568 Kaltenkirchen · Germany
☎ +49-4191-508-0 · 🖷 +49-4191-508-209
contact@wiska.de · www.wiska.com

Other technical data on request / subject to change without notice

Weight	0,66 kg
Approval	RMRS, DNV-GL
Colour	Black
Mounting	Upside, Upside down, Ceiling, Surface mounting
Equipment	4 threaded knockout entry M20
Tariff number	85318070

Remarks:

- LED multi-purpose luminaire made of impact and water resistant plastic
- protection class IP68 (2 bar – 30 min)
- 2 cable glands M 20 (7,5 – 14mm) enclosed loose
- clear cover
- LED Light module 5W 230V 840 mounted

Spare parts

SP-1131-2000 ST/LED 230Vac/840	22001154

16.12.2025

Your Contact:
WISKA Hoppmann GmbH
Kisdorfer Weg 28 · 24568 Kaltenkirchen · Germany
☎ +49-4191-508-0 · 🖷 +49-4191-508-209
contact@wiska.de · www.wiska.com

Other technical data on request / subject to change without notice

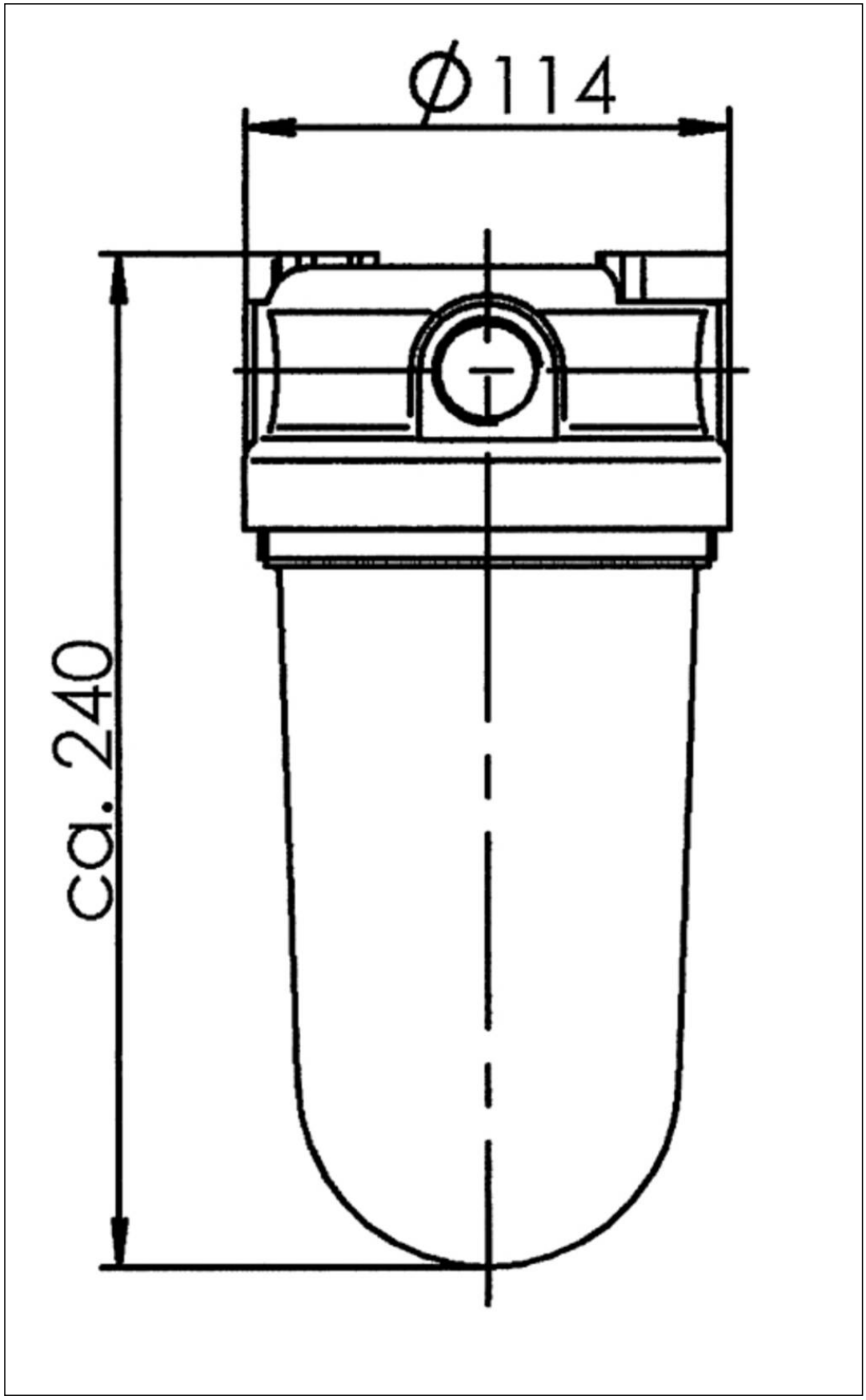

Your Contact:
WISKA Hoppmann GmbH
Kisdorfer Weg 28 · 24568 Kaltenkirchen · Germany
☎ +49-4191-508-0 · 🖷 +49-4191-508-209
contact@wiska.de · www.wiska.com

Other technical data on request / subject to change without notice

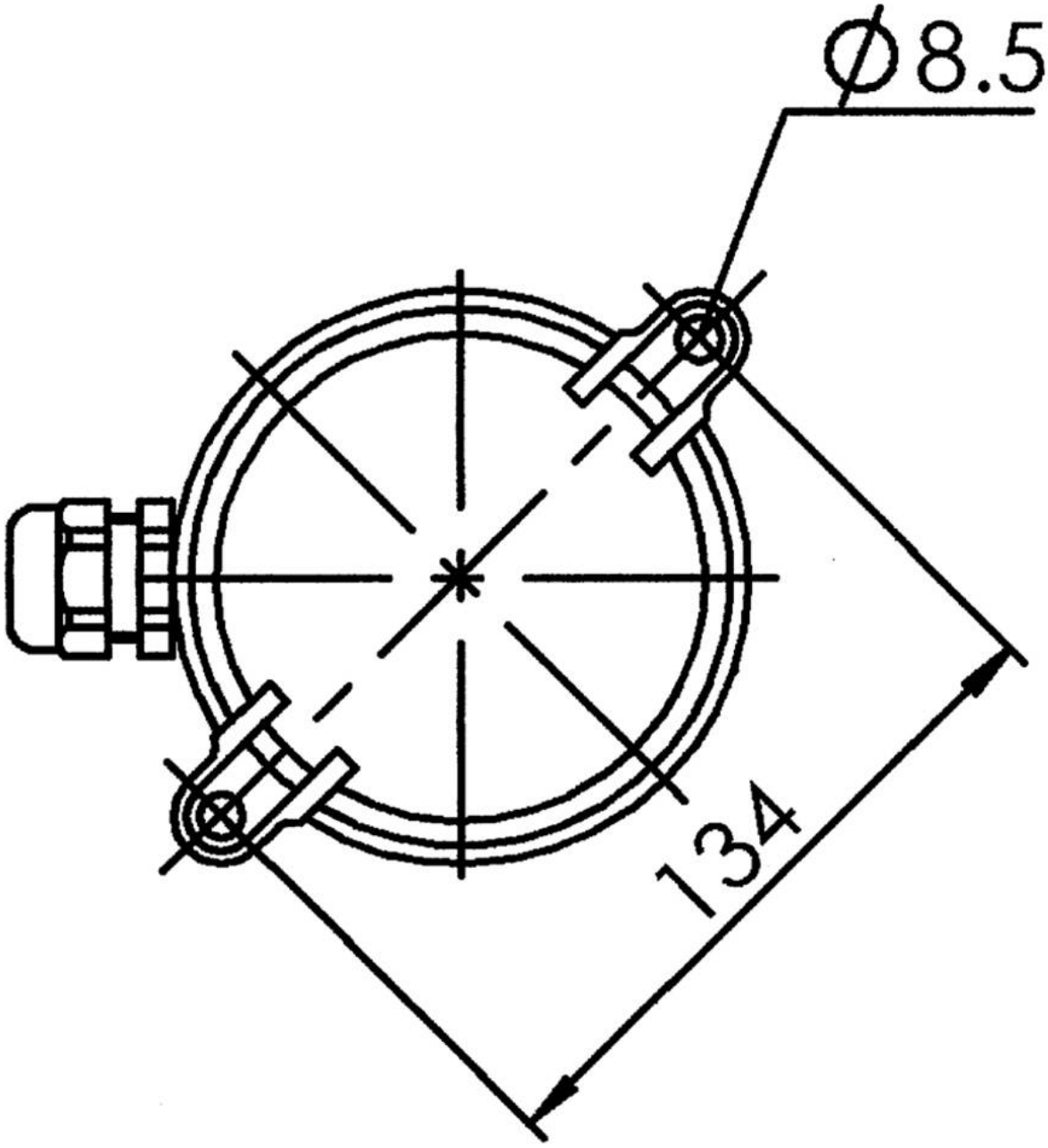

Your Contact:
WISKA Hoppmann GmbH
Kisdorfer Weg 28 · 24568 Kaltenkirchen · Germany
☎ +49-4191-508-0 · 🖷 +49-4191-508-209
contact@wiska.de · www.wiska.com

Other technical data on request / subject to change without notice