4000-1x26-230-3-S-LE

LED multi-purpose luminaire 4000, 1x26W 230V, plastic, IP68


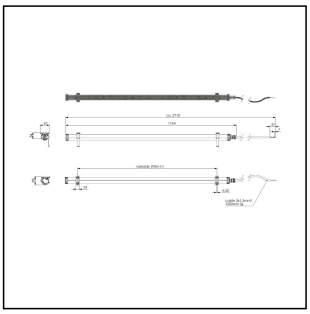
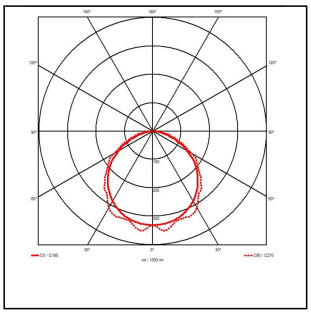

Products may differ in size, colour and appearance to those shown. If you require further information or customisation, please contact us directly.

WISKA-Order no.	10112205
Type	4000-1x26-230-3-S-LE
Material	Polycarbonate
Globe colour	Clear
Wattage	26 W
Power^	1 x 26 W
Voltage	230 V
Protection class	IP66 / IP68 (0,2 bar 30min)
Type of Voltage	AC
Frequence	50/60 Hz
Connection	1,5m cable
Operational areas	Engine room, Outdoor, Cargo hold
Temp. range min	-30 °C
Temp. range max	55 °C
Lightsource	LED
Lightsource incl.	Yes
Colour temperature	5600 K
Luminous flux	2800 lm
Colour rendering index	CRI > 80
Rated Lifetime	L70/B50 @Ta +35 °C
System Lifetime	100000 h
Mounting	Ceiling, Wall, Surface mounting
Colour	RAL 7035
External dimensions LxWxH	1175x62x53mm
Approval	DNV-GL, RMRS

Your Contact:
WISKA Hoppmann GmbH
Kisdorfer Weg 28 · 24568 Kaltenkirchen · Germany
☎ +49-4191-508-0 · 🖷 +49-4191-508-209
contact@wiska.de · www.wiska.com

Other technical data on request / subject to change without notice

Weight	1,03 kg

Remarks:

LED strip
1,5m connecting cable 2x1,5mm²
outer diameter 7,6mm
Breathing via VentGLAND cable gland
Mounting via two clamps

Recommended accessories

SP-4000-Pipe clamp stainless steel 2 pcs	22001016

Spare parts

SP-4000-Pipe clamps set for COMBI	22001364

14.01.2026

Your Contact:
WISKA Hoppmann GmbH
Kisdorfer Weg 28 · 24568 Kaltenkirchen · Germany
☎ +49-4191-508-0 · 🖷 +49-4191-508-209
contact@wiska.de · www.wiska.com

Other technical data on request / subject to change without notice

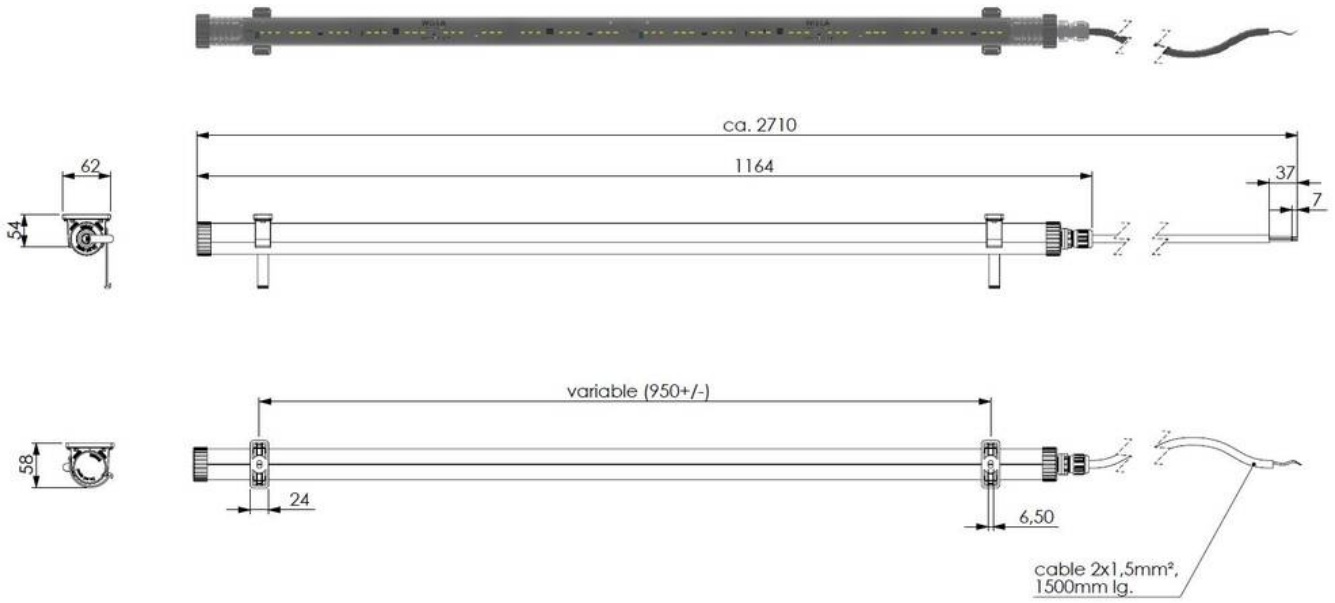

Your Contact:
WISKA Hoppmann GmbH
Kisdorfer Weg 28 · 24568 Kaltenkirchen · Germany
☎ +49-4191-508-0 · 🖷 +49-4191-508-209
contact@wiska.de · www.wiska.com

Other technical data on request / subject to change without notice

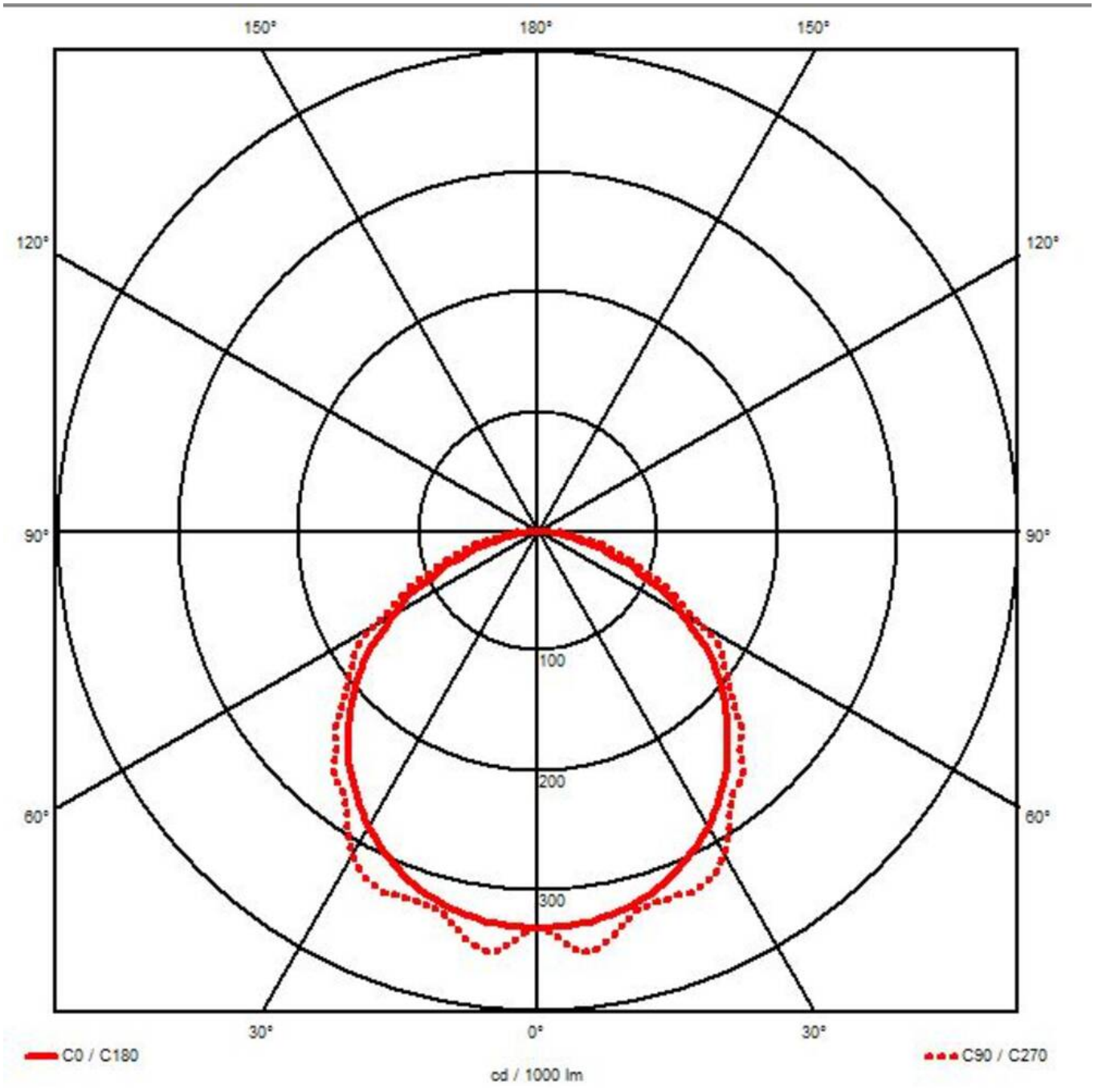

Your Contact:
WISKA Hoppmann GmbH
Kisdorfer Weg 28 · 24568 Kaltenkirchen · Germany
☎ +49-4191-508-0 · 🖷 +49-4191-508-209
contact@wiska.de · www.wiska.com

Other technical data on request / subject to change without notice