Product Data Sheet

5010-1x220W-MB-BK-AA

LED Floodlight 1x220W 230V aluminium



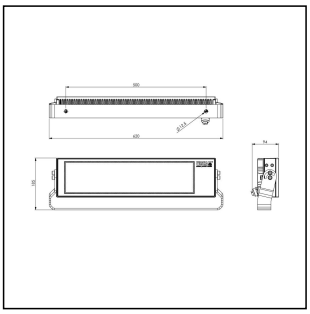

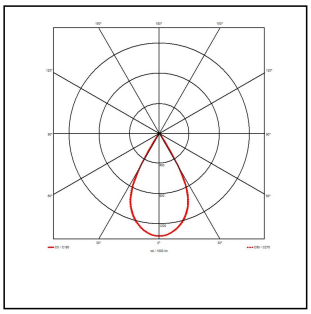

Products may differ in size, colour and appearance to those shown. If you require further information or customisation, please contact us directly.

WISKA-Order no.	10113065
Type	5010-1x220W-MB-BK-AA
Material	Aluminium, Stainless steel
Reflector	Medium beam
Wattage	220 W
Power^	1 x 220 W
Protection class	IP66 / IP67
Operational areas	Indoor / Outdoor
Temp. range min	-25 °C
Temp. range max	45 °C
Mounting	Wall, Ceiling, Upside
Lightsource	LED
Lightsource incl.	Yes
Colour temperature	5700 K
Luminous flux	30000 lm
Colour rendering index	≥ 80
Rated Lifetime	L80/B10 @Ta +45 °C
System Lifetime	100000 h
Type of cable gland	M 25 x 1,5
Material cable gland	Brass nickel-plated
Ø cable diameter min	9 mm
Ø cable diameter max	17 mm
External dimensions LxWxH	620x185x94mm
Colour	Black
Weight	9,12 kg

Your Contact:
WISKA Hoppmann GmbH
Kisdorfer Weg 28 · 24568 Kaltenkirchen · Germany
☎ +49-4191-508-0 · 🖷 +49-4191-508-209
contact@wiska.de · www.wiska.com

Other technical data on request / subject to change without notice

Tariff number	94054990

Remarks:

A ballast is required to operate the spotlight (see accessories).
The maximum cable length between the ballast and the spotlight must not exceed 50 m.

Spare parts

SP-5010 LED Driver 220W	22001431

26.01.2026

Your Contact:
WISKA Hoppmann GmbH
Kisdorfer Weg 28 · 24568 Kaltenkirchen · Germany
☎ +49-4191-508-0 · 🖷 +49-4191-508-209
contact@wiska.de · www.wiska.com

Other technical data on request / subject to change without notice

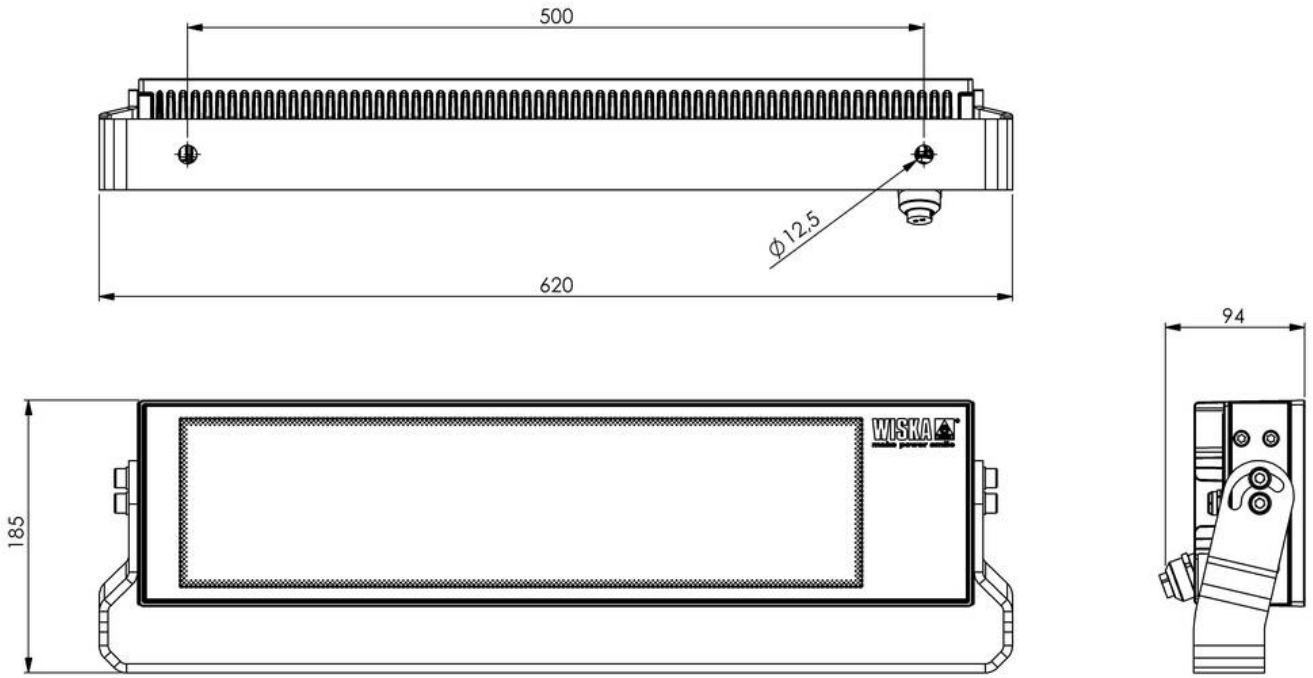

Your Contact:
WISKA Hoppmann GmbH
Kisdorfer Weg 28 · 24568 Kaltenkirchen · Germany
☎ +49-4191-508-0 · 🖷 +49-4191-508-209
contact@wiska.de · www.wiska.com

Other technical data on request / subject to change without notice

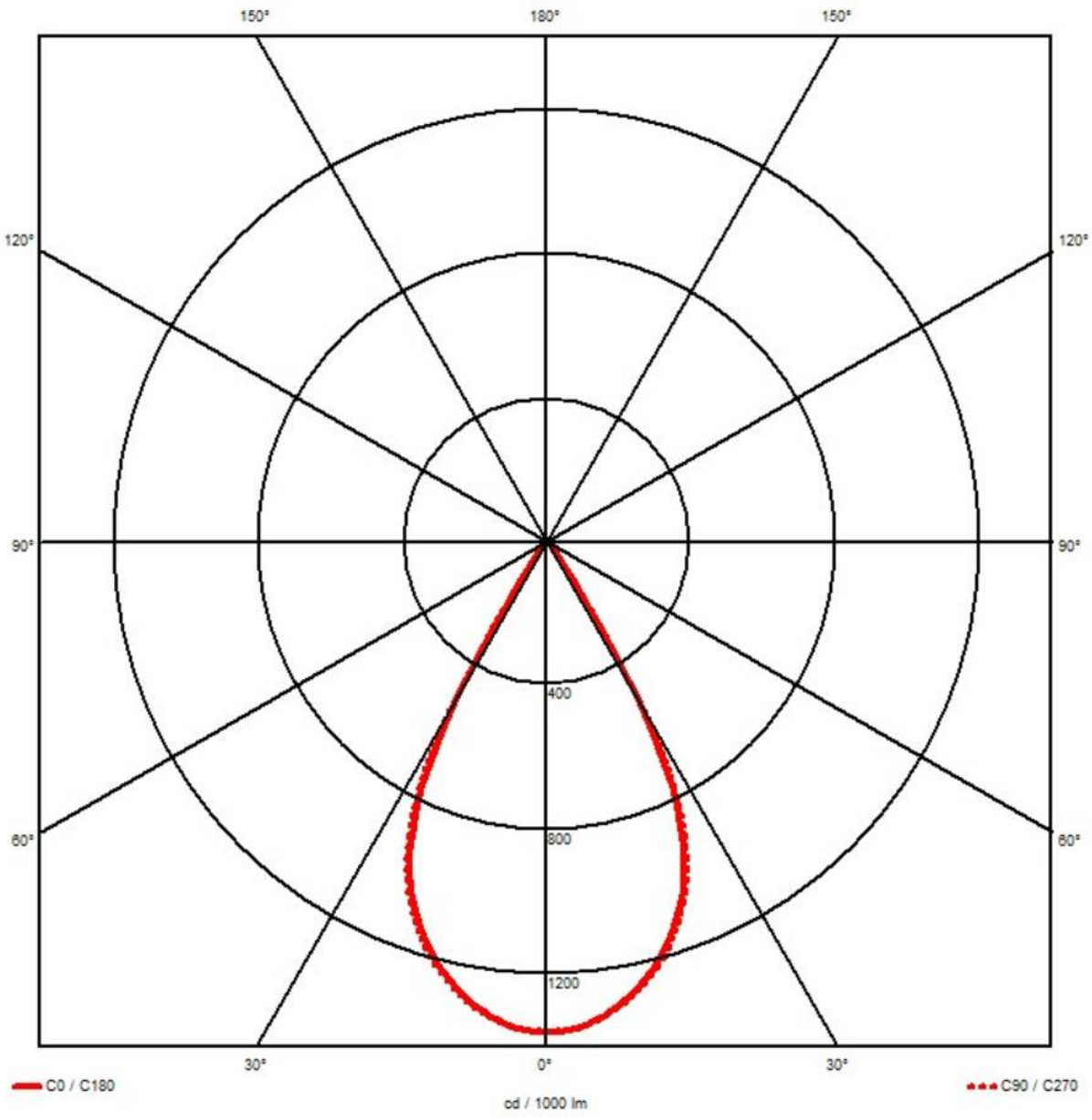

Your Contact:
WISKA Hoppmann GmbH
Kisdorfer Weg 28 · 24568 Kaltenkirchen · Germany
☎ +49-4191-508-0 · 🖷 +49-4191-508-209
contact@wiska.de · www.wiska.com

Other technical data on request / subject to change without notice