5010-PU-2x220W-230-AA-E01

Ballast Unit for LED Floodlight 5010 2x220W



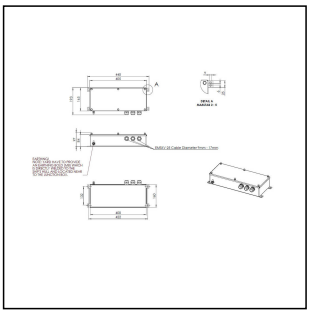

Products may differ in size, colour and appearance to those shown. If you require further information or customisation, please contact us directly.

WISKA-Order no.	10113097
Type	5010-PU-2x220W-230-AA-E01
Material	Stainless steel
Wattage	440 W
Power^	2 x 220 W
Voltage min. (V)	198 V
Voltage max. (V)	264 V
Type of Voltage	AC / DC
Frequence	50/60 Hz
Protection class	IP66 / IP67
Operational areas	Outdoor
Temp. range min	-25 °C
Temp. range max	45 °C
Mounting	Wall
System Lifetime	100000 h
Type of cable gland	M 25 x 1,5
Material cable gland	Brass nickel-plated
Ø cable diameter min	9 mm
Ø cable diameter max	17 mm
External dimensions LxWxH	440 x 160 x 90 mm
Colour	White
Surface	Powder coated
Weight	5,6 kg
Tariff number	85041080

Remarks:

Your Contact:
WISKA Hoppmann GmbH
Kisdorfer Weg 28 · 24568 Kaltenkirchen · Germany
☎ +49-4191-508-0 · 🖷 +49-4191-508-209
contact@wiska.de · www.wiska.com

Other technical data on request / subject to change without notice

D4i-certificated ballast unit

The maximum cable length between the ballast unit and the floodlight must not exceed 50 metres.

Spare parts

SP-5010-PU-2x220W-230 Mounting plate	22001430

15.12.2025

Your Contact:
WISKA Hoppmann GmbH
Kisdorfer Weg 28 · 24568 Kaltenkirchen · Germany
☎ +49-4191-508-0 · 🖷 +49-4191-508-209
contact@wiska.de · www.wiska.com

Other technical data on request / subject to change without notice

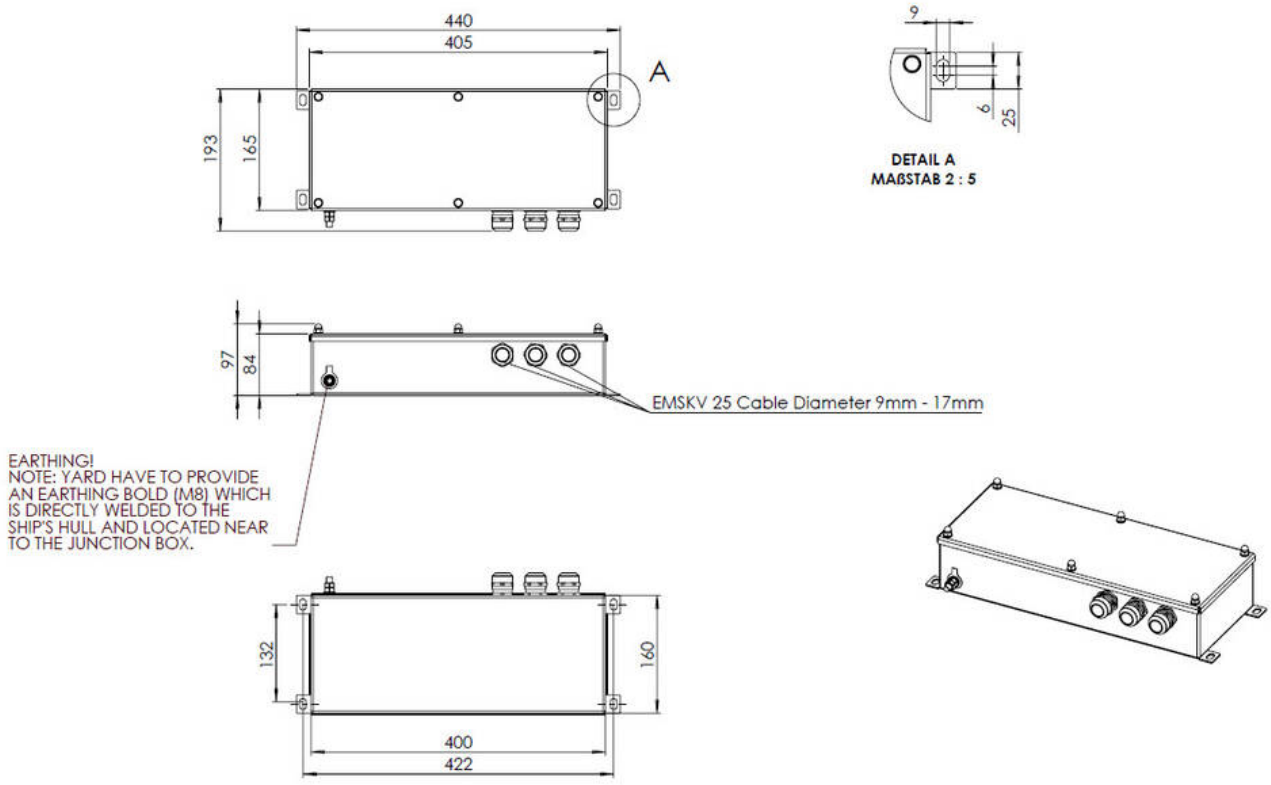

Your Contact:
WISKA Hoppmann GmbH
Kisdorfer Weg 28 · 24568 Kaltenkirchen · Germany
☎ +49-4191-508-0 · 🖷 +49-4191-508-209
contact@wiska.de · www.wiska.com

Other technical data on request / subject to change without notice