510/2/2x24-Z14

Ex Junction box 134x109x65mm, brass, with terminal block



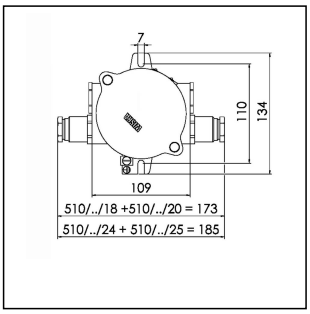

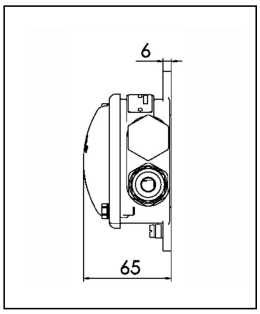

Products may differ in size, colour and appearance to those shown. If you require further information or customisation, please contact us directly.

WISKA-Order no.	10030255
Type	510/2/2x24-Z14
Material	Brass
Voltage	690 V
Protection class	IP66
Operational areas	Explosion protection
Temp. range min	-55 °C
Temp. range max	130 °C
Material cable gland	Brass
Type of cable gland	M 24 x 1,5
Ø cable diameter min	12 mm
Ø cable diameter max	14,5 mm
Type of cable	armoured
External dimensions LxWxH	134x109x65mm
Mounting	Surface mounting
Rated cross section	6 mm²
Equipment	Clamp
Terminals/poles	2 x 2-poles, 6mm²
Explosion Groups	II
Marking	II 2 G Ex eb IIC T6...T4 Gb, II 2 D Ex tb IIIC T85°C Db
Using for cable gland	
Zone	1
Approval	RMRS, DNV-GL
Weight	1,43 kg
Variations	on request

Your Contact:
WISKA Hoppmann GmbH
Kisdorfer Weg 28 · 24568 Kaltenkirchen · Germany
☎ +49-4191-508-0 · 🖷 +49-4191-508-209
contact@wiska.de · www.wiska.com

Other technical data on request / subject to change without notice

Tariff number	85369010

Equipment:

- 4 contact points to 3x6mm²
- Cable gland M 24x1,5, internal parts Z14
- Position of cable entries is exchangeable

Spare parts

SP-EX-510 terminal block 2x2 pole 6mm²	22000410

03.10.2025

Your Contact:
WISKA Hoppmann GmbH
Kisdorfer Weg 28 · 24568 Kaltenkirchen · Germany
☎ +49-4191-508-0 · 🖷 +49-4191-508-209
contact@wiska.de · www.wiska.com

Other technical data on request / subject to change without notice

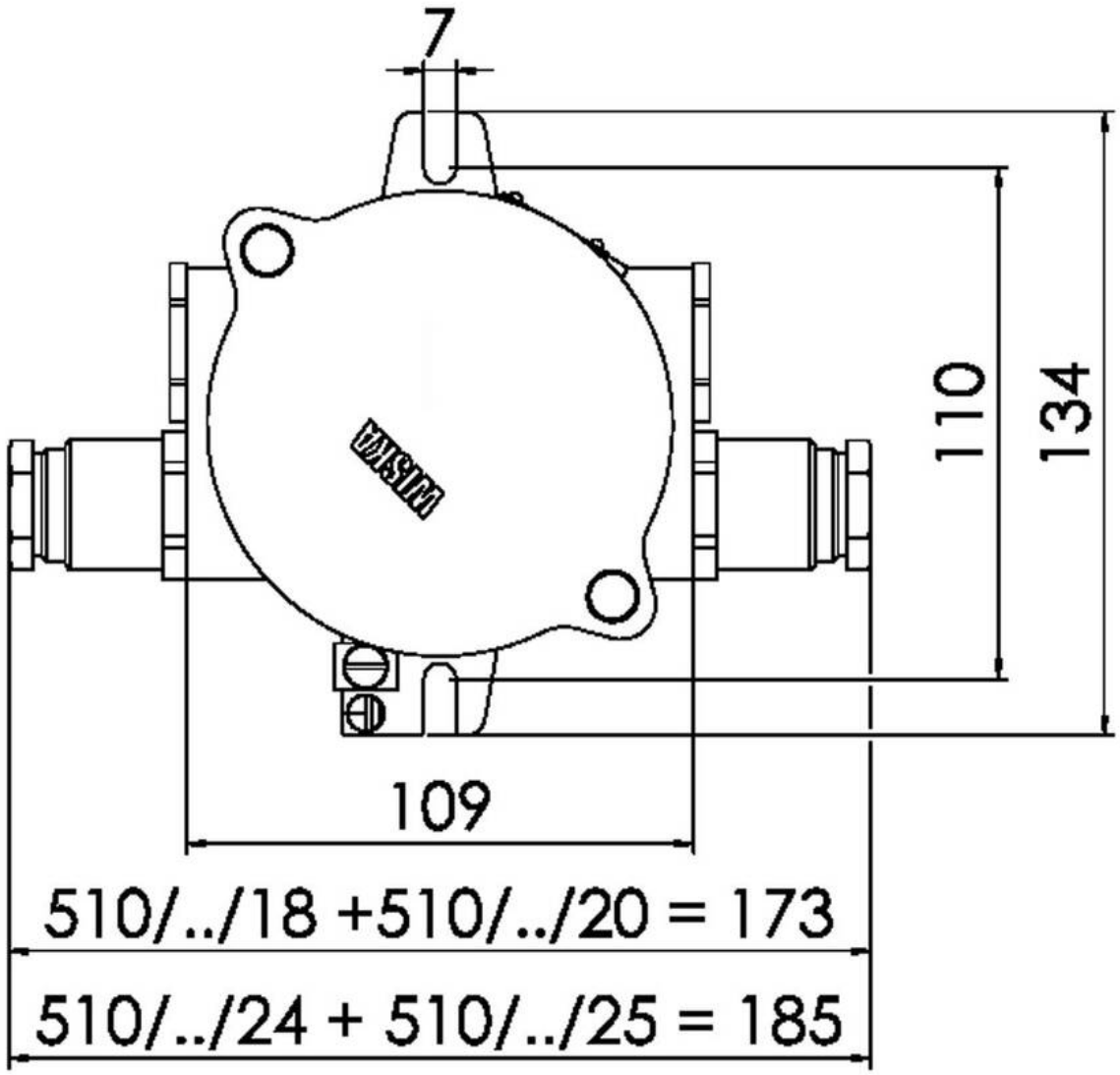

Your Contact:
WISKA Hoppmann GmbH
Kisdorfer Weg 28 · 24568 Kaltenkirchen · Germany
☎ +49-4191-508-0 · 🖷 +49-4191-508-209
contact@wiska.de · www.wiska.com

Other technical data on request / subject to change without notice

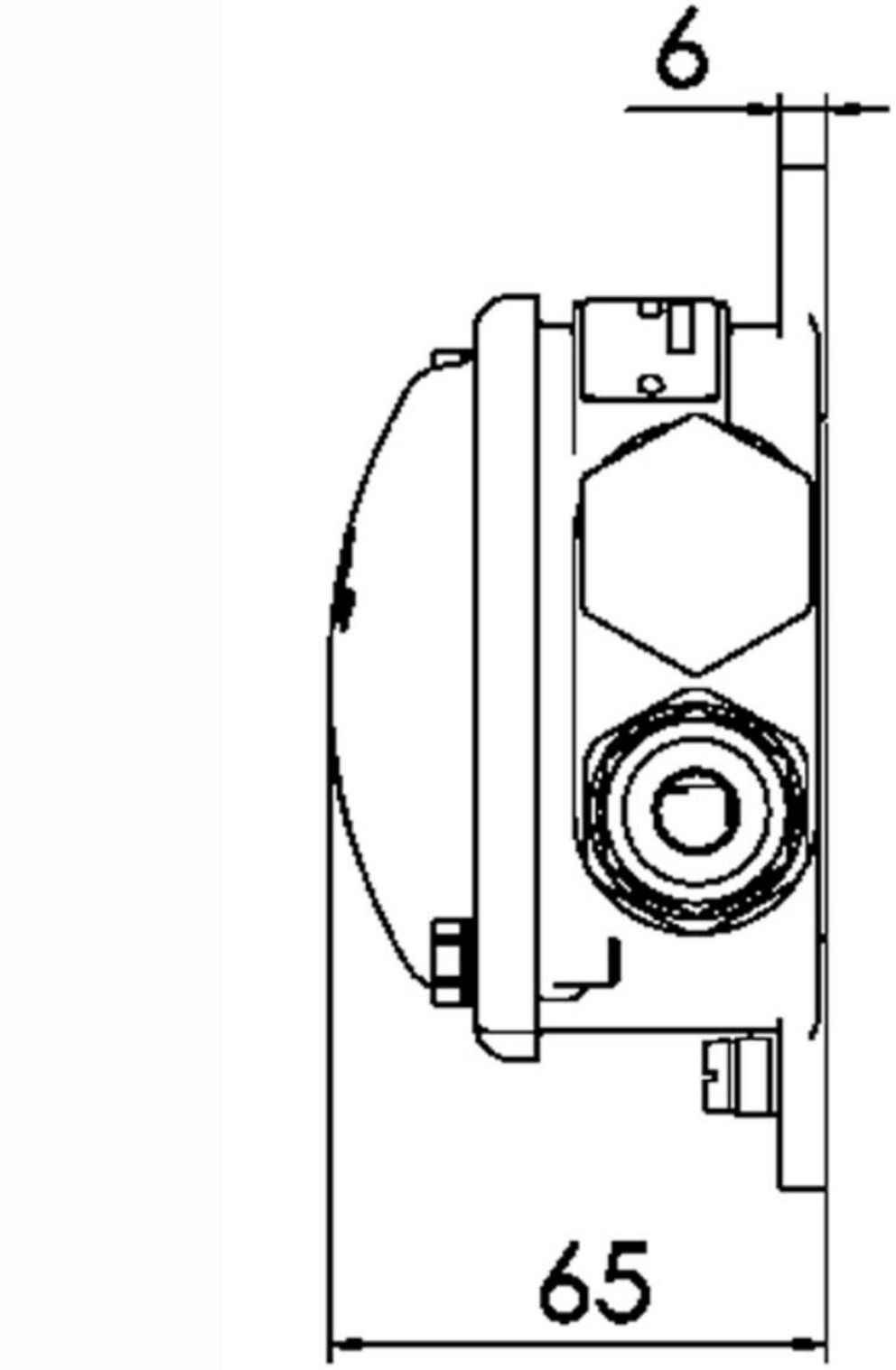

Your Contact:
WISKA Hoppmann GmbH
Kisdorfer Weg 28 · 24568 Kaltenkirchen · Germany
☎ +49-4191-508-0 · 🖷 +49-4191-508-209
contact@wiska.de · www.wiska.com

Other technical data on request / subject to change without notice