CKM 20 V0 LG

CONMAXX divided gland with locknut, polyamide, RAL 7035, M20



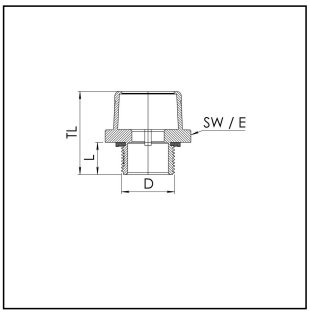

Products may differ in size, colour and appearance to those shown. If you require further information or customisation, please contact us directly.

Material cable gland	polyamide UL94-V0
Material sealing gasket	TPE UL94-V0
Protection class	IP66
Temp. range min	-40 °C
Temp. range max	100 °C
Thread type	M
Ø Connection thread D	20
Lead	1,5
Length screw-in thread L	15 mm
Key width SW	38 mm
Collar diameter (E)	40 mm
Total length TL	39 mm
Product Color	RAL 7035
Equipment	incl. locknut
Type	CKM 20 V0 LG
Order no. RAL 7035	10108663
Packing unit	1
EAN number	4007686067682
Tariff number	39269097
ETIM-Classification	EC000441

Remarks:

- inclusive divided locknut
- suitable sealing inserts: CDKG

02.02.2026

Your Contact:
WISKA Hoppmann GmbH
Kisdorfer Weg 28 · 24568 Kaltenkirchen · Germany
☎ +49-4191-508-0 · 🖷 +49-4191-508-209
contact@wiska.de · www.wiska.com

Other technical data on request / subject to change without notice

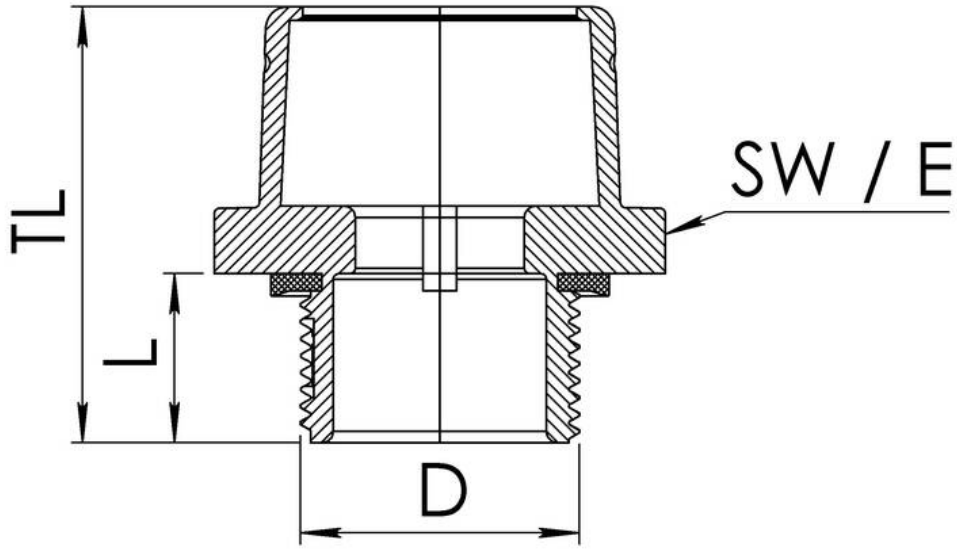

Your Contact:
WISKA Hoppmann GmbH
Kisdorfer Weg 28 · 24568 Kaltenkirchen · Germany
☎ +49-4191-508-0 · 🖷 +49-4191-508-209
contact@wiska.de · www.wiska.com

Other technical data on request / subject to change without notice