COMBI IP68 SET 308 LG

Junction boxes 85x85x51mm, plastic, RAL 7035, with sealing compound



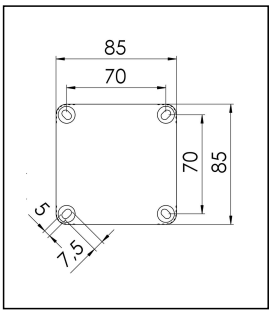

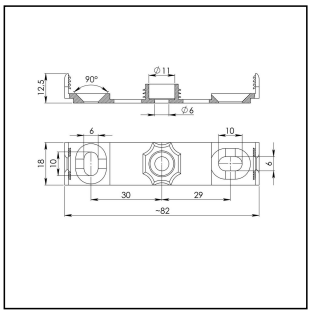

Products may differ in size, colour and appearance to those shown. If you require further information or customisation, please contact us directly.

COMBI RoHS

Material	Polypropylene
Material sealing gasket	TPE
Temp. range min	-30 °C
Temp. range max	100 °C
Temperatures during install.	-5 °C - 60 °C
Protection class	IP68 (15 m 170 h)
Glow wire test	750 °C
Voltage	400 V
Rated cross section	4 mm²
Fixing	4 internal openings
Ø cable diameter min	3 mm
Ø cable diameter max	12 mm
External dimensions LxWxH	85 x 85 x 51 mm
Using for cable gland	
Product Color	RAL 7035
Order no. RAL 7035	10060457
Type	COMBI IP68 SET 308 LG
Packing unit	1
ETIM-Classification	EC002600

Remarks:

Junction box with sealing compound

Filling material: silicone gel

Filling material in practical mixing bag, Plastic sprue for easy removal, screw plug

16.03.2026

Your Contact:
WISKA Hoppmann GmbH
Kisdorfer Weg 28 · 24568 Kaltenkirchen · Germany
☎ +49-4191-508-0 · 🖷 +49-4191-508-209
contact@wiska.de · www.wiska.com

Other technical data on request / subject to change without notice

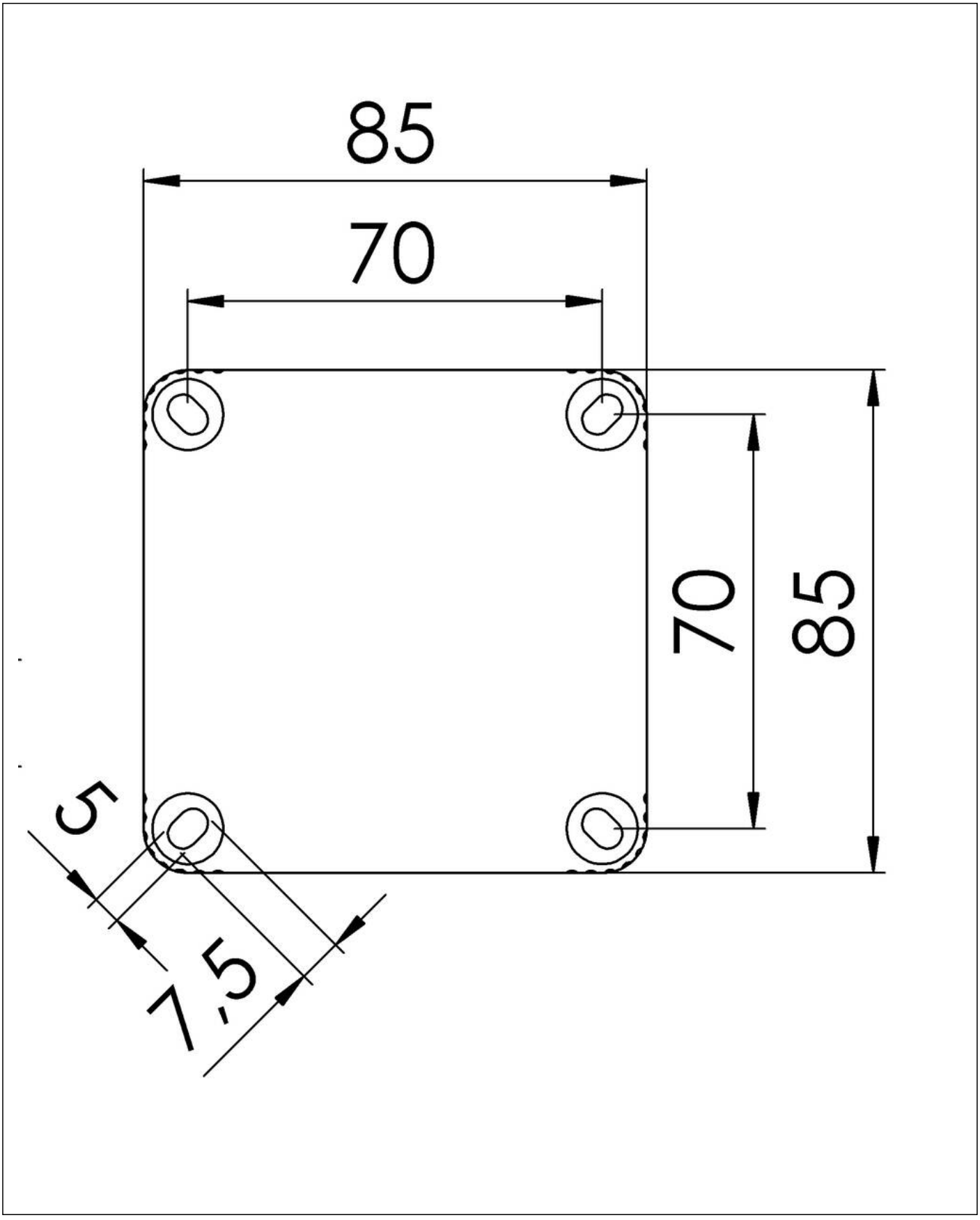

Your Contact:
WISKA Hoppmann GmbH
Kisdorfer Weg 28 · 24568 Kaltenkirchen · Germany
☎ +49-4191-508-0 · 🖷 +49-4191-508-209
contact@wiska.de · www.wiska.com

Other technical data on request / subject to change without notice