COMBI MAR 308/5 LG

Junction Box 85x85x51mm, Polypropylene, RAL 7035, with terminal block



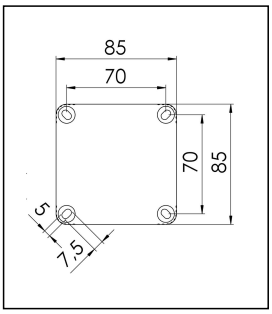

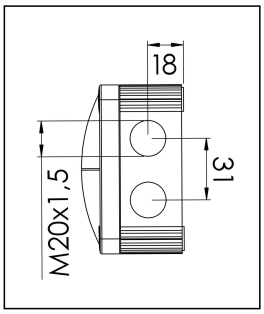

Products may differ in size, colour and appearance to those shown. If you require further information or customisation, please contact us directly.

Material	Polypropylene
Material sealing gasket	TPE
Temp. range min	-30 °C
Temp. range max	100 °C
Temperatures during install.	-5 °C - 60 °C
Protection class	IP66 / IP67
Glow wire test	960 °C
Voltage	400 V
Rated current / A (Terminal)	32 A
Rated cross section	4 mm²
Terminals/poles	5-pole, 4,0 mm²
Fixing	4 internal openings
Ø cable diameter min	3 mm
Ø cable diameter max	12 mm
External dimensions LxWxH	85 x 85 x 51 mm
Type of cable gland	M 20 x 1,5
Using for cable gland	
Product Color	RAL 7035
WISKA-Order no.	10060498
Type	COMBI MAR 308/5 LG
Packing unit	5
ETIM-Classification	EC002600
EAN number	4007685604987
Tariff number	85369010

Remarks:

Your Contact:
WISKA Hoppmann GmbH
Kisdorfer Weg 28 · 24568 Kaltenkirchen · Germany
☎ +49-4191-508-0 · 🖷 +49-4191-508-209
contact@wiska.de · www.wiska.com

Other technical data on request / subject to change without notice

IP66: using the membrane entry

IP67: using the threaded entry together with ESKV cable gland

Equipment:

- 8 M20 threaded membrane entries

- 4 captive cover screws

- including terminal block 5-poles, 4mm²

Fixing:

With 4 internal openings outside of the sealing area

Recommended accessories

MP-S Mounting plate small	10105774
MP-L Mounting plate large COMBI / WHK	10105775
External mounting - COMBI LG	10108836
ZER 4-12 LG	10109800

Spare parts

SP-HKT 11/5 Terminal block	22001132

23.04.2026

Your Contact:
WISKA Hoppmann GmbH
Kisdorfer Weg 28 · 24568 Kaltenkirchen · Germany
☎ +49-4191-508-0 · 🖷 +49-4191-508-209
contact@wiska.de · www.wiska.com

Other technical data on request / subject to change without notice

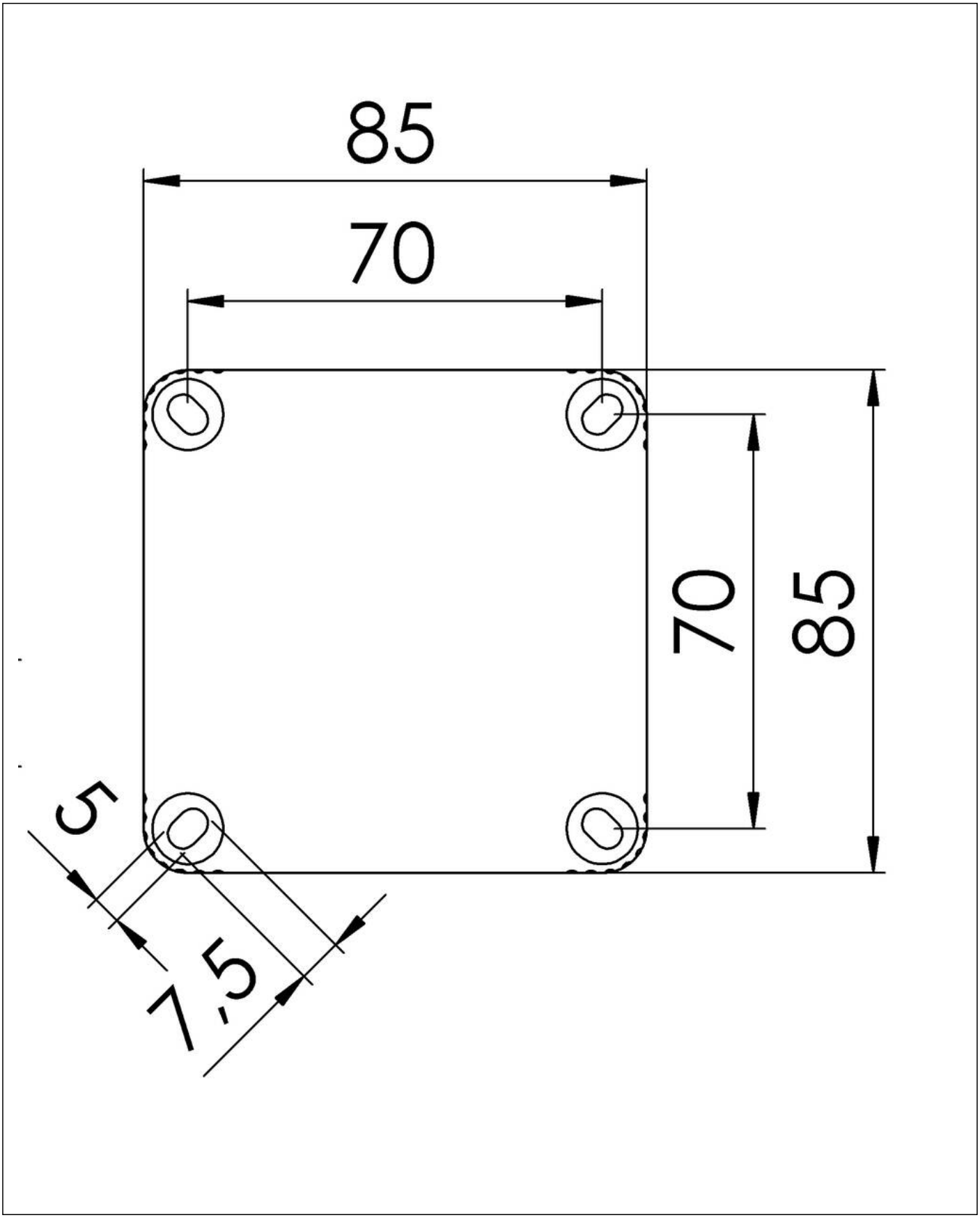

Your Contact:
WISKA Hoppmann GmbH
Kisdorfer Weg 28 · 24568 Kaltenkirchen · Germany
☎ +49-4191-508-0 · 🖷 +49-4191-508-209
contact@wiska.de · www.wiska.com

Other technical data on request / subject to change without notice

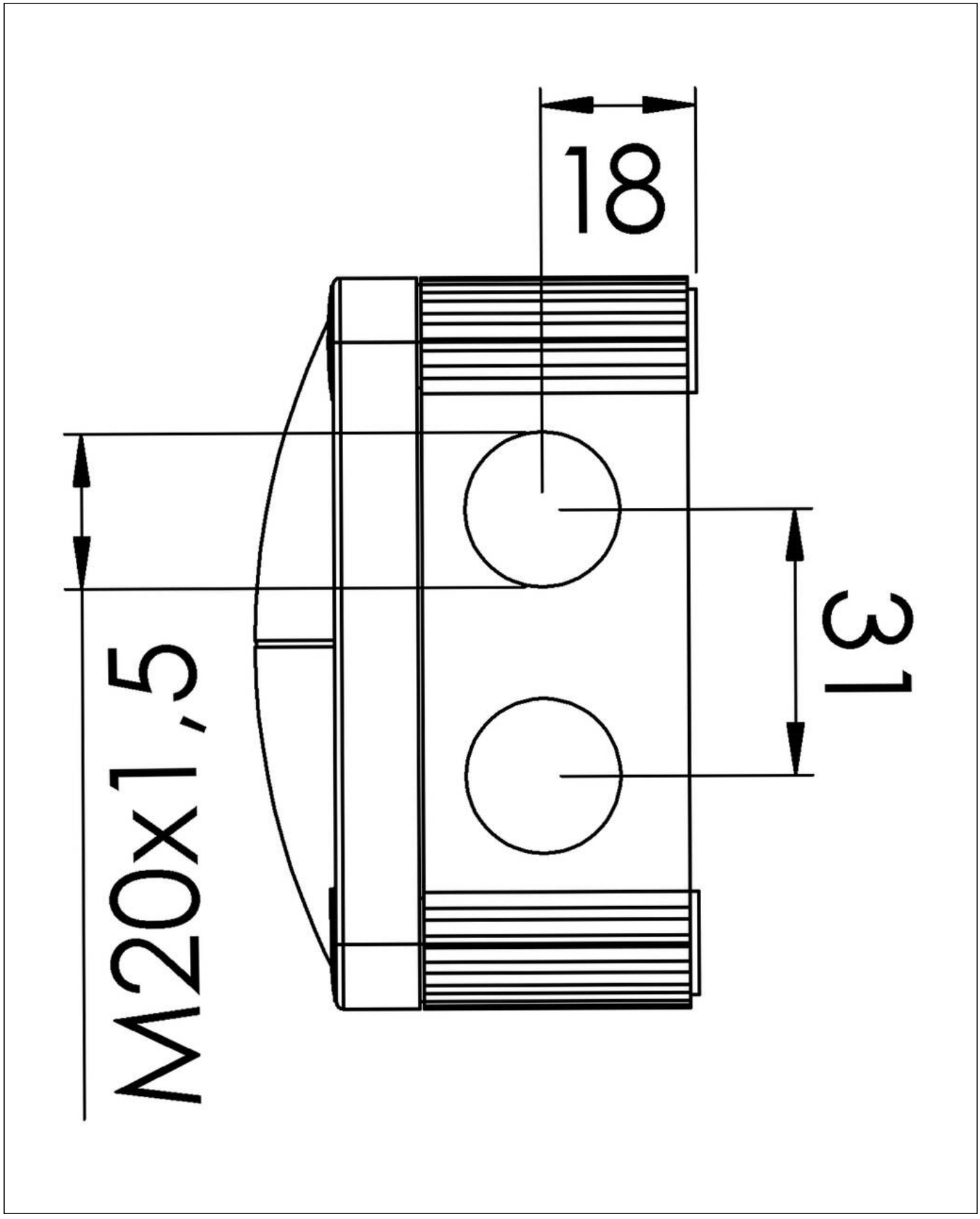

Your Contact:
WISKA Hoppmann GmbH
Kisdorfer Weg 28 · 24568 Kaltenkirchen · Germany
☎ +49-4191-508-0 · 🖷 +49-4191-508-209
contact@wiska.de · www.wiska.com

Other technical data on request / subject to change without notice