COMBI MAR 407 BK

Junction box 95x95x60mm, polypropylene, RAL 9005



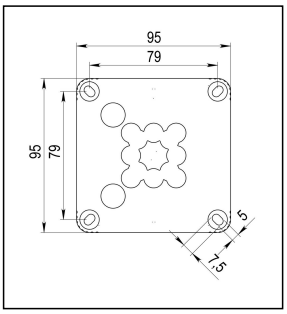

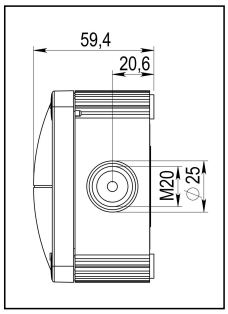

Products may differ in size, colour and appearance to those shown. If you require further information or customisation, please contact us directly.

COMBI RoHS

Material	Polypropylene
Material sealing gasket	TPE
Temp. range min	-30 °C
Temp. range max	100 °C
Temperatures during install.	-5 °C - 60 °C
Protection class	IP66 / IP67
Glow wire test	960 °C
Voltage	690 V
Rated cross section	4 mm²
Fixing	4 internal openings
Ø cable diameter min	3 mm
Ø cable diameter max	12 mm
External dimensions LxWxH	95 x 95 x 60mm
Type of cable gland	M 20 x 1,5, M 25 x 1,5
Using for cable gland	
Product Color	RAL 9005
WISKA-Order no.	10111026
Type	COMBI MAR 407 BK
Packing unit	5
ETIM-Classification	EC002600

Remarks:

IP66: using the membrane entry

IP67: using the threaded entry together with ESKV cable gland

Equipment:

Your Contact:
WISKA Hoppmann GmbH
Kisdorfer Weg 28 · 24568 Kaltenkirchen · Germany
☎ +49-4191-508-0 · 🖷 +49-4191-508-209
contact@wiska.de · www.wiska.com

Other technical data on request / subject to change without notice

- 6x M20 threaded membrane entries and 1 middle M20 threaded membrane entry with knockout to M25

- 2 membrane cable entries through rear

- 4 captive cover screws

Fixing:

With 4 internal openings outside of the sealing area

Recommended accessories

DIN Rail Kit - COMBI 407/TS 15	10105604
DIN Rail Kit - COMBI 407/TS 35	10105605
MP-S Mounting plate small	10105774
MP-L Mounting plate large COMBI / WHK	10105775
External mounting - COMBI LG	10108836
ZER 4-12 LG	10109800
SP-KT-W 221/CSM-3x221-413	22001114
SP-KT-W 221/CSM	22001115
SP-HKT 11/5 Terminal block	22001132

13.10.2025

Your Contact:
WISKA Hoppmann GmbH
Kisdorfer Weg 28 · 24568 Kaltenkirchen · Germany
☎ +49-4191-508-0 · 🖷 +49-4191-508-209
contact@wiska.de · www.wiska.com

Other technical data on request / subject to change without notice

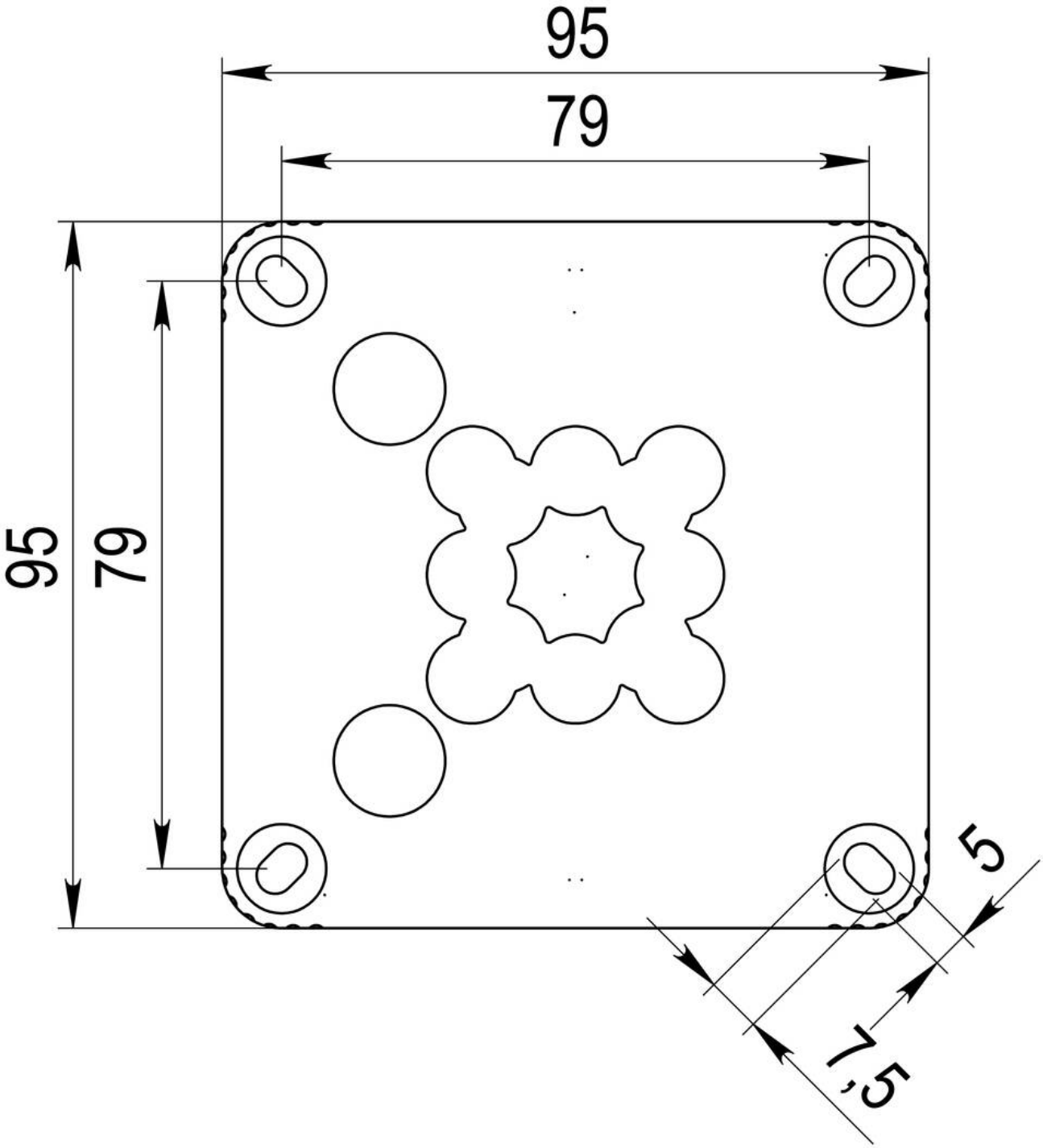

Your Contact:
WISKA Hoppmann GmbH
Kisdorfer Weg 28 · 24568 Kaltenkirchen · Germany
☎ +49-4191-508-0 · 🖷 +49-4191-508-209
contact@wiska.de · www.wiska.com

Other technical data on request / subject to change without notice

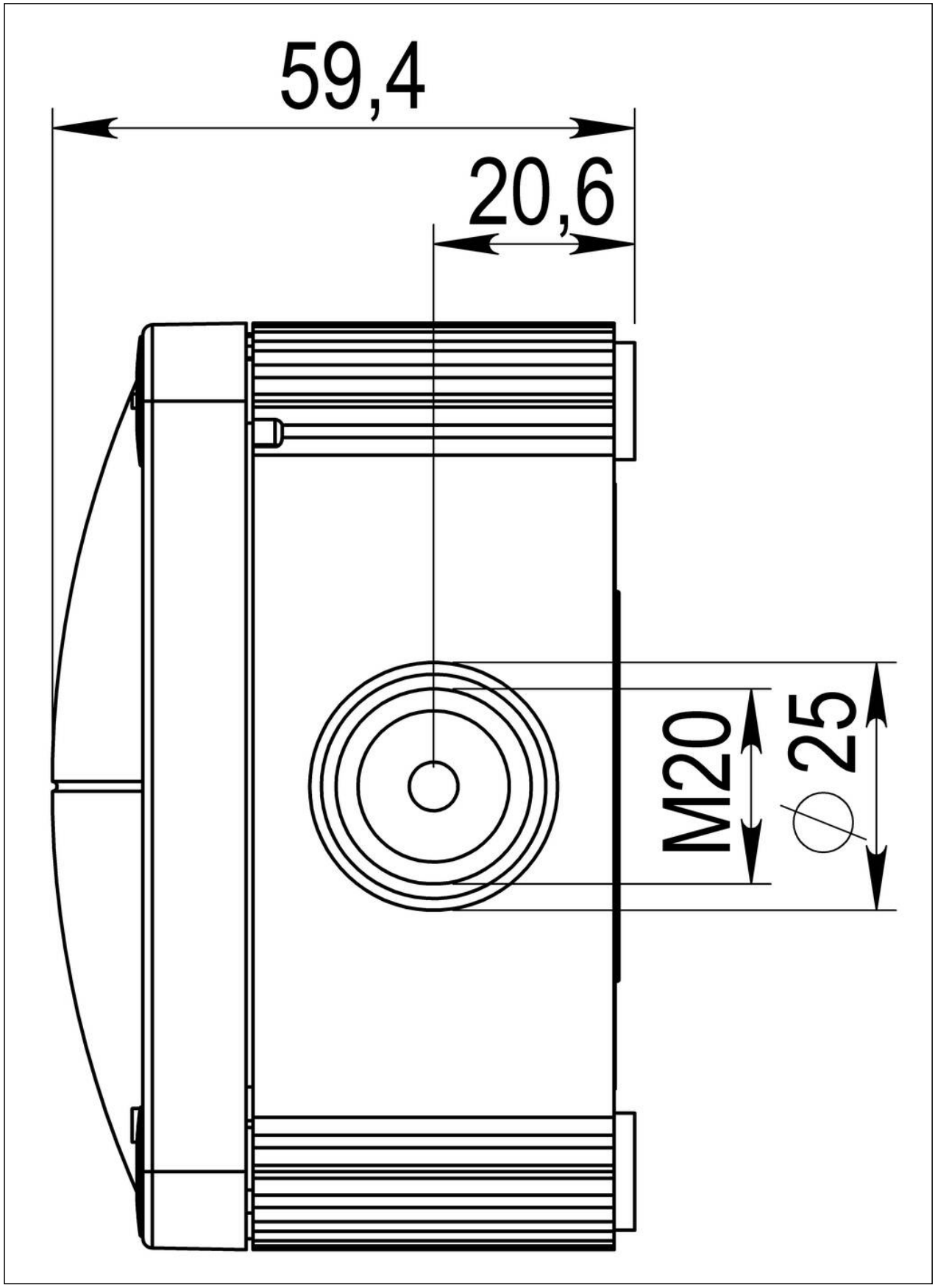

Your Contact:
WISKA Hoppmann GmbH
Kisdorfer Weg 28 · 24568 Kaltenkirchen · Germany
☎ +49-4191-508-0 · 🖷 +49-4191-508-209
contact@wiska.de · www.wiska.com

Other technical data on request / subject to change without notice