Ex-3312/D/E27/2x20-Z10

Ex Incandescent light



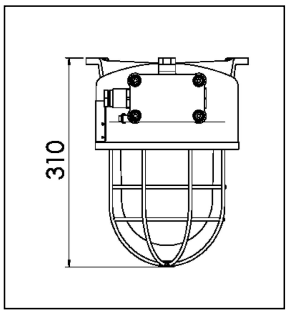

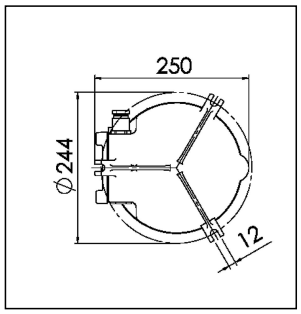

Products may differ in size, colour and appearance to those shown. If you require further information or customisation, please contact us directly.

WISKA-Order no.	10104849
Type	Ex-3312/D/E27/2x20-Z10
Material	Brass
Globe colour	Clear
Material guard	Brass
Power^	max. 200 W
Voltage	230 V
Voltage max. (V)	250 V
Type of Voltage	AC
Frequence	50/60 Hz
Protection class	IP66 / IP67
Operational areas	Explosion protection, Outdoor
Temp. range min	-40 °C
Temp. range max	55 °C
Lampholder	E27
Number of lampholder	1 items
Lightsource	variable (E27)
Lightsource incl.	No
Type of cable gland	M 20 x 1,5
Material cable gland	Brass
Using for cable gland	
Type of cable	armoured
Ø cable diameter min	8 mm
Ø cable diameter max	10,5 mm
Mounting	Upside down, Surface mounting, Ceiling

Your Contact:
WISKA UK Ltd.
Unit 7, Hurling Way · St. Columb Major Business Park · TR9 6SX, St. Columb Major, Cornwall · Great Britain
☎ +44-12-08816062 · 🖷 +44-12-08816708
info@wiska.co.uk · www.wiska.co.uk

Other technical data on request / subject to change without notice

Approval	IECEx TUR 15.0022X, TÜV 14 ATEX 7567 X
Marking	II2D Ex tbIIIC T85...T200°C Db, II 2G Ex de IIC T6...T3 Gb
Explosion Groups	IIC
Temp.-class	max. T6
Zone	21, 1
External dimensions LxWxH	244x255x310mm
Weight	14,27 kg
Tariff number	94051990

Remarks:

Light fittings with protection guard,
brass, 3312, up to T6, max. 200W, IP66/67
Ignition protection: de
Explosionsschutz:
II 2G Ex de IIC T6...T3 Gb
II 2D Ex tb IIIC T85°C...T200°C Db
Zone: 1
Bescheinigungen: TÜV 14 ATEX 7567 X
IECEx TUR 15.0022X
Lampholder: E27
Lamp: incandescent lamp up to 200W;
Fluorescent lamp up to 25W; blendend
lamp up to 160W; LED lamp up to 18W
(not included in delivery)
2 cable glands M20x1,5-Z10 -O-
for armoured cable 8-10,5mm in diameter

Spare parts

SP-1974/BRS Lampholder E27	22000420
SP-DH 6 Rotary lever	22000421
SP-IPS 6-5 Inner hexagonal key 5mm	22000422

17.03.2026

Your Contact:
WISKA UK Ltd.
Unit 7, Hurling Way · St. Columb Major Business Park · TR9 6SX, St. Columb Major, Cornwall · Great Britain
☎ +44-12-08816062 · 🖷 +44-12-08816708
info@wiska.co.uk · www.wiska.co.uk

Other technical data on request / subject to change without notice

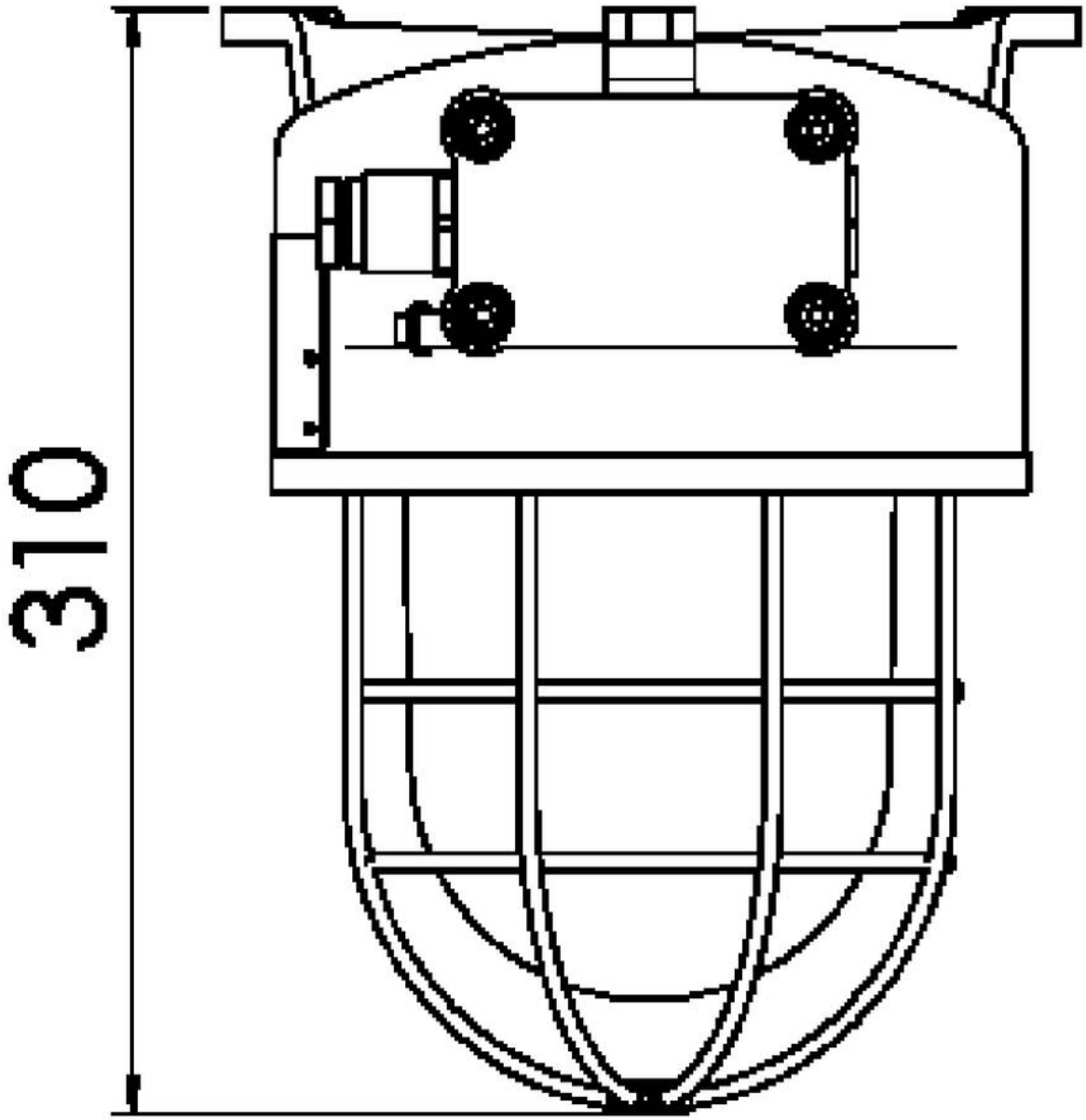

Your Contact:
WISKA UK Ltd.
Unit 7, Hurling Way · St. Columb Major Business Park · TR9 6SX, St. Columb Major, Cornwall · Great Britain
☎ +44-12-08816062 · 🖷 +44-12-08816708
info@wiska.co.uk · www.wiska.co.uk

Other technical data on request / subject to change without notice

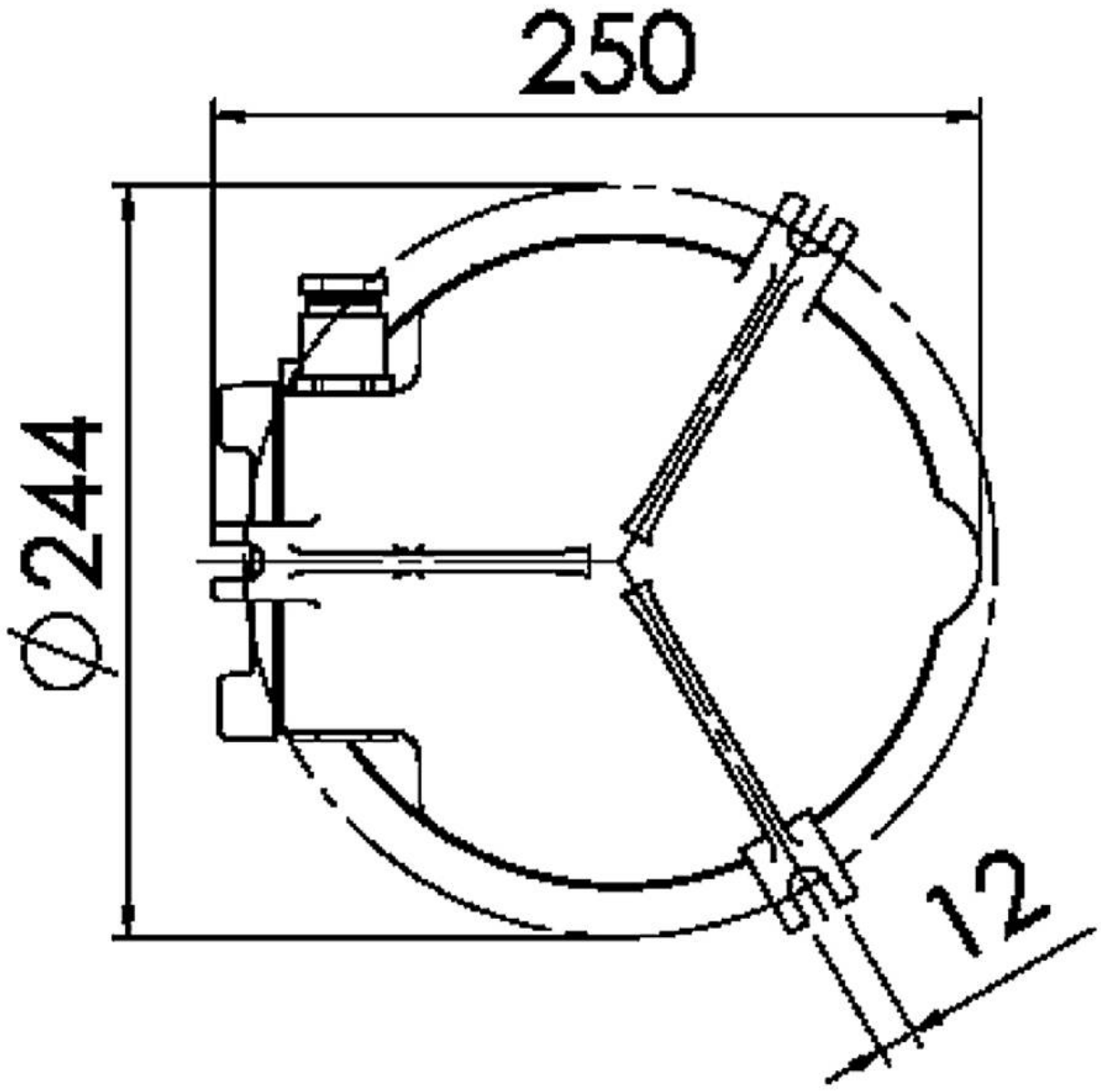

Your Contact:
WISKA UK Ltd.
Unit 7, Hurling Way · St. Columb Major Business Park · TR9 6SX, St. Columb Major, Cornwall · Great Britain
☎ +44-12-08816062 · 🖷 +44-12-08816708
info@wiska.co.uk · www.wiska.co.uk

Other technical data on request / subject to change without notice