FLRS Series - LED Floodlight Rugged Series 200Watt 90-305Vac 34.000Lumens

High-Performance Marine & Offshore LED Floodlight.
80 µm Anodized Extruded Aluminum Housing | Up to 170 lm/W System Efficacy

170LM/W | IP67 | 90-305 Vac | 20-30 Vdc | Dimmable | 80µ | 5 year warranty

No coating applied, 80µ anodized housing
For extreme applications







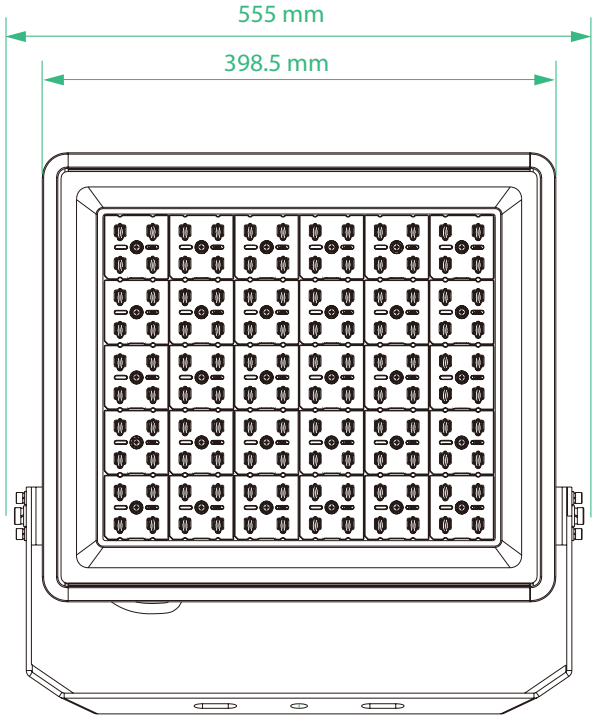

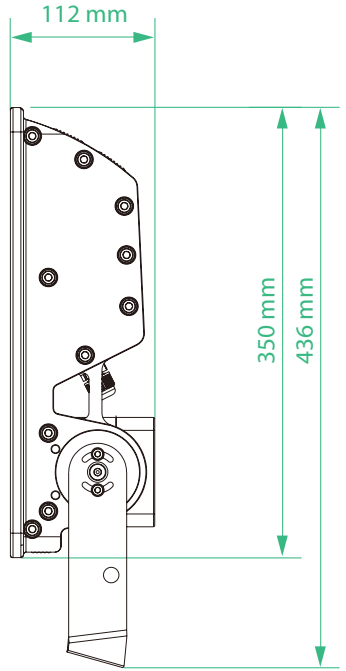

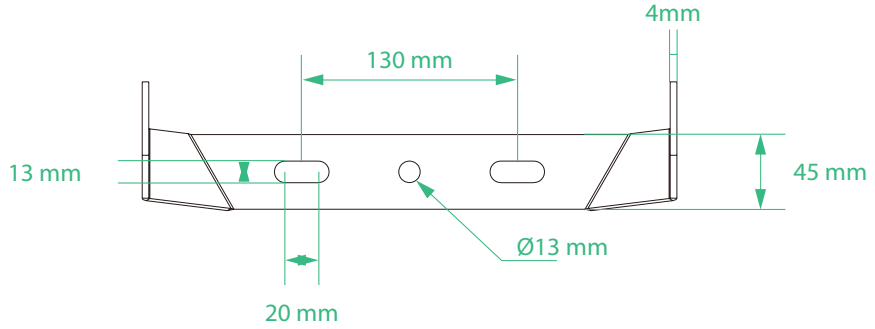

LED Lighting
E-LED Lighting B.V. & Inc.
www.e-ledlighting.com
European Office Tel: +31 346 28 62 62
United States Office Tel: +1 561 776 1702

Technical Information

Material:	80µ black anodised extruded aluminium housing & Junction box
Hardware:	Marine grade A4 316 stainless steel
Lens:	90° standard, 30°- and 60° optional
IP Rating:	IP67
Light Source:	200Watt
	170Lumens per Watt
	Natural White 3900K
	CRI > 85
Power Source:	SOSEN
	90-305Vac 50~60Hz
	Dimmable driver (0-10Vdc – PWM – Resistance)
	Overload, over-voltage, over-temperature and short circuit protection
	Potted driver
Ambient Temperature:	Operating temperature -40°C ~ +55°
Cable Entry:	2 x M20 Cable Gland Nickel plated brass
Mounting:	Adjustable A4 316 Stainless Steel bracket
	6mm thickness
	Standard supplied SS316 safety wire
Fixture weight:	12,5 kg





Compliances
Manufactured in accordance with applicable marine industry requirements and standards, including IEC600902-306:2022 and relevant VDE requirements for lighting equipment intended for use on ships and offshore installations.

Special Projects
We may be able to accommodate your special projects, so please don't hesitate to ask about additional options. Minimum order quantities and/or extended leadtimes will apply. Contact your E-LED Lighting representative with specific inquiries.

Product design and specifications are subject to change without notice. The most current specification sheets can be found at www.E-LEDLighting.com.











E-LED Lighting B.V. & Inc.
www.e-ledlighting.com

European Office Tel: +31 346 28 62 62
United States Office Tel: +1 561 776 1702

E LED Lighting